Dräger
MEDICAL

Caleo®

Neonatal incubator

Instructions for Use
Software 2.n

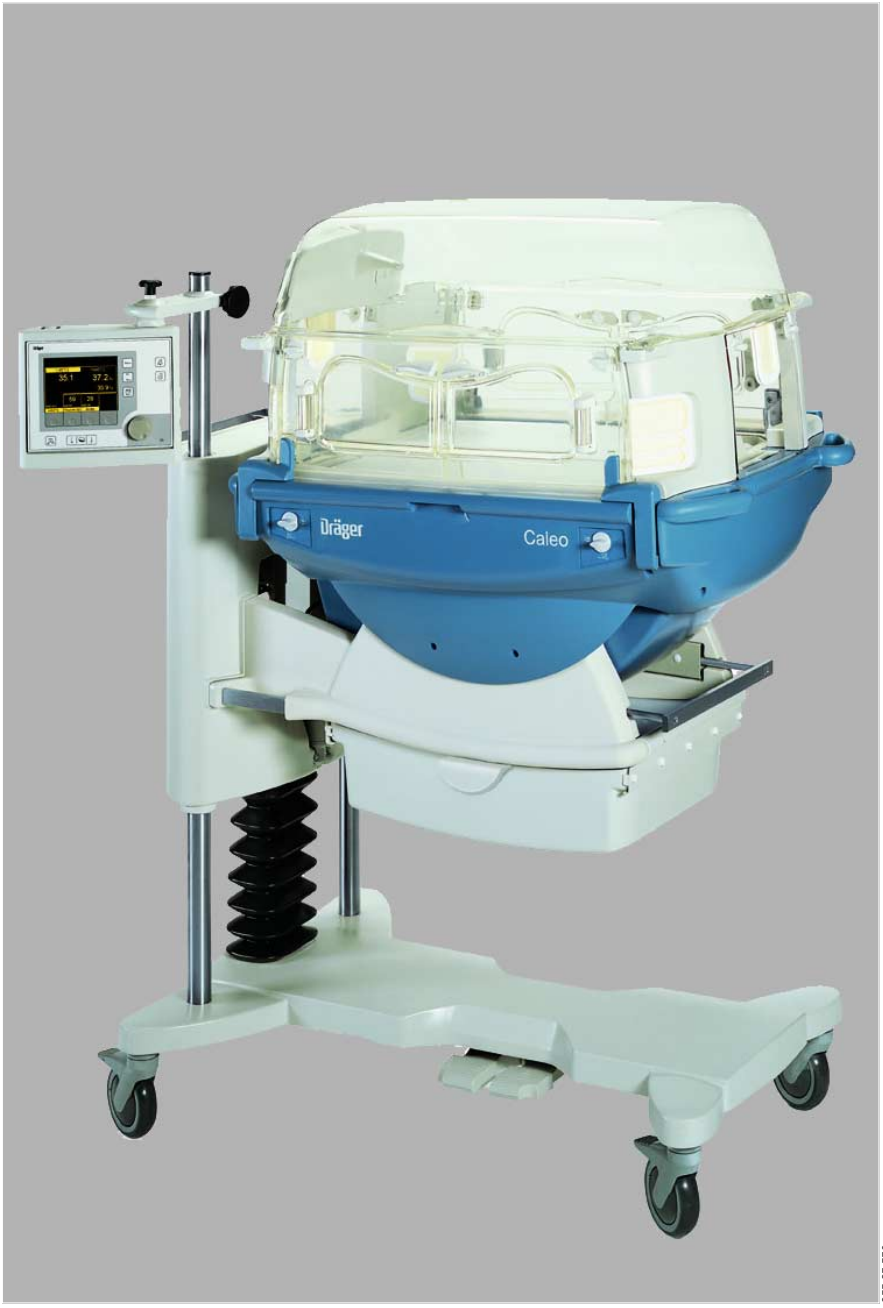

255 37 570

How to use the Instructions for Use

The headline...

specifies the subject of the main chapter

to help you find your way around rapidly.

The page...

contains instructions for use of the unit

in a combination of text and illustrations. The information is translated directly into practical actions showing the user how to use the unit.

The left-hand column...

contains text

explaining the unit and guiding the user clearly to its uses through concise instructions in ergonomic sequence.

- ● Dots refer to actions,
- 1 Numbers refer to the illustration next to the text and to the sequence of actions in the case of operations consisting of several steps.

The right-hand column...

contains illustrations

as a reference to the text and to guide the user in handling the unit itself. The elements mentioned in the text are highlighted, and unnecessary details are omitted. The user is guided by screens confirming the various steps required for each action.

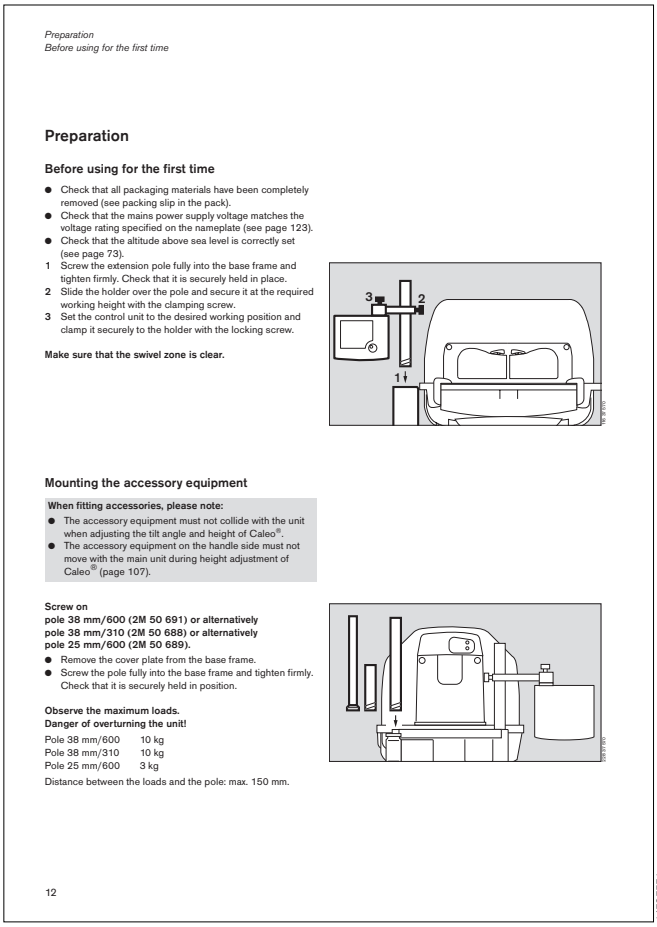

Preparation
Before using for the first time

Preparation

Before using for the first time

- ● Check that all packaging materials have been completely removed (see packing slip in the pack).
- ● Check that the mains power supply voltage matches the voltage rating specified on the nameplate (see page 123).
- ● Check that the altitude above sea level is correctly set (see page 73).

1 Screw the extension pole fully into the base frame and tighten firmly. Check that it is securely held in place.
2 Slide the holder over the pole and secure it at the required working height with the clamping screw.
3 Set the control unit to the desired working position and clamp it securely to the holder with the locking screw.

Make sure that the swivel zone is clear.

Mounting the accessory equipment

When fitting accessories, please note:

- ● The accessory equipment must not collide with the unit when adjusting the tilt angle and height of Caleo®.
- ● The accessory equipment on the handle side must not move with the main unit during height adjustment of Caleo® (page 107).

Screw on
pole 38 mm/600 (2M 50 691) or alternatively
pole 38 mm/310 (2M 50 688) or alternatively
pole 25 mm/600 (2M 50 689).

- ● Remove the cover plate from the base frame.
- ● Screw the pole fully into the base frame and tighten firmly. Check that it is securely held in position.

Observe the maximum loads.
Danger of overturning the unit!

Pole 38 mm/600	10 kg
Pole 38 mm/310	10 kg
Pole 25 mm/600	3 kg

Distance between the loads and the pole: max. 150 mm.

12

14737571

Contents

For Your Safety and that of Your Patients	4
Intended Use	5
What's what	8
Operating concept	9
Preparation	12
Checking readiness for operation	26
Operation	34
Disinfecting/Cleaning/Sterilising	84
Maintenance intervals	95
Troubleshooting – Error Messages	98
Troubleshooting – Faults	103
Technical Data	106
Description	112
Order list	128
Parts List	131
Index	132

For Your Safety and that of Your Patients

Strictly follow the Instructions for Use

Any use of the apparatus requires full understanding and strict observation of these instructions. The apparatus is only to be used for purposes specified here.

Maintenance

The apparatus must be inspected and serviced regularly by trained service personnel at six monthly intervals.
Repair and general overhaul of the apparatus may only be carried out by trained service personnel. We recommend that a service contract be obtained with DrägerService and that all repairs also be carried out by them.
Only authentic Dräger spare parts may be used for maintenance.
Observe chapter "Maintenance Intervals".

Accessories

Do not use accessory parts other than those in the order list.

Not for use in areas of explosion hazard

This apparatus is neither approved nor certified for use in areas where combustible or explosive gas mixtures are likely to occur.

Safe connection with other electrical equipment

Electrical connections to equipment which is not listed in these Instructions for Use should only be made following consultations with the respective manufacturers or an expert.

Liability for proper function or damage

The liability for the proper function of the apparatus is irrevocably transferred to the owner or operator to the extent that the apparatus is serviced or repaired by personnel not employed or authorized by DrägerService or if the apparatus is used in a manner not conforming to its intended use.
Dräger cannot be held responsible for damage caused by non-compliance with the recommendations given above.
The warranty and liability provisions of the terms of sale and delivery of Dräger are likewise not modified by the recommendations given above.

Dräger Medical AG & Co. KGaA

Intended Use

Therapy system providing a controlled supply of warmth, humidity* and O_2 enrichment* in the patient capsule for premature babies and sick neonates up to a body weight of 5 kg or a body length of 55 cm (when treating twins, the total body weight is limited to 5 kg).

Used in

clinical environment, where premature babies or neonates need controlled climate parameters.

The unit may only be used by properly trained personnel under the supervision of qualified medical staff familiar with the currently known risks and benefits of using an incubator.

Possibilities for nursing and therapy

- Heat therapy through control of air temperature or skin temperature
- Humidification
- O_2 therapy through controlled O_2 enrichment
- Normal or intensive care via hand ports or a large front flap
- Bed with pivoting adjustment for raising and lowering the head

With monitoring for

- Air temperature
- Skin temperature
- Relative humidity
- O_2 concentration
- Weight*

* optional equipment feature

What's what

Contents

What's what 8

Front view 8
Side view, connections 8
Top view, bed 9

Operating concept 9

Control unit 9
Screen 10

What's what

Front view

1 Canopy
2 Hand port
3 Front flap
4 Handle for transport
5 Housing
6 Drawer (2M 50 565)*
7 Pedals for height adjustment*
8 Height adjustable pillar* / Housing support
9 Connection for water heater (LuerLock)*
10 X-ray drawer / removable bed
11 Display
12 Control unit
13 Pillar element

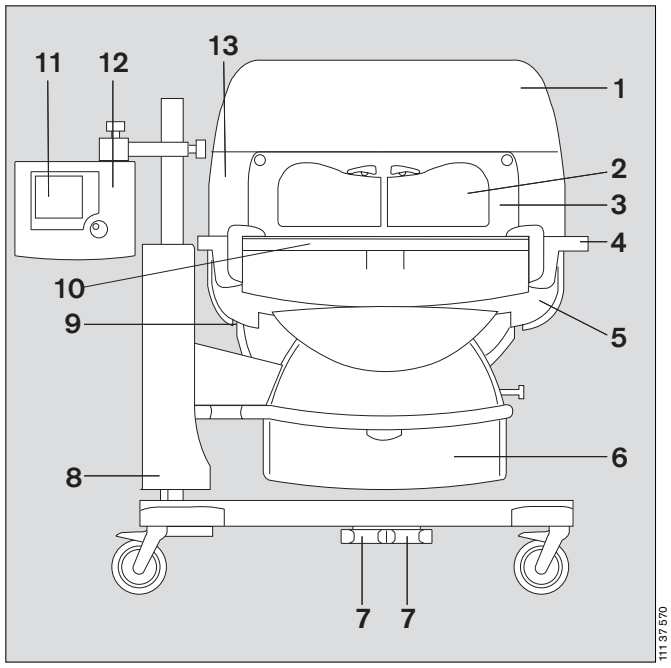

Side view, connections

14 Central alarm indicator
15 Sensor unit, temperature connections
16 Mains power connection
17 On/off switch
18 Fresh air filter (MX 17 015)
19 Connection for O_2 for adjustment*
20 Water container (2M 50 040)*
21 Tubing grommet (2M 50 385)
22 Side flap
23 Tubing port (2M 50 412)
24 Feeding grommet, hood (2M 50 352)
25 Trolley castor with direction lock
26 Trolley castors, brake with breaks

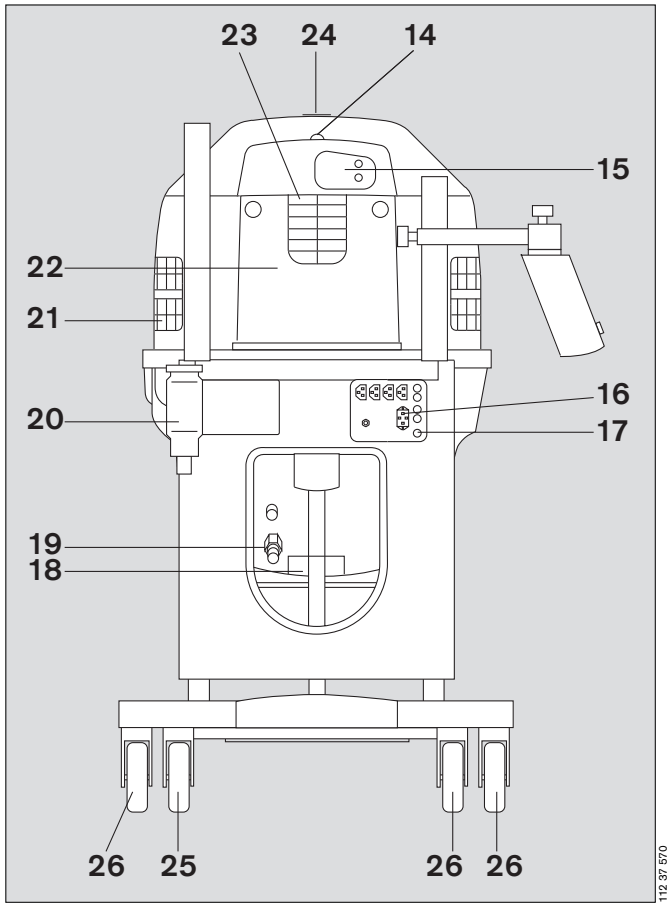

* optional equipment feature

Top view, bed

1 Spirit levels
2 Hot air duct

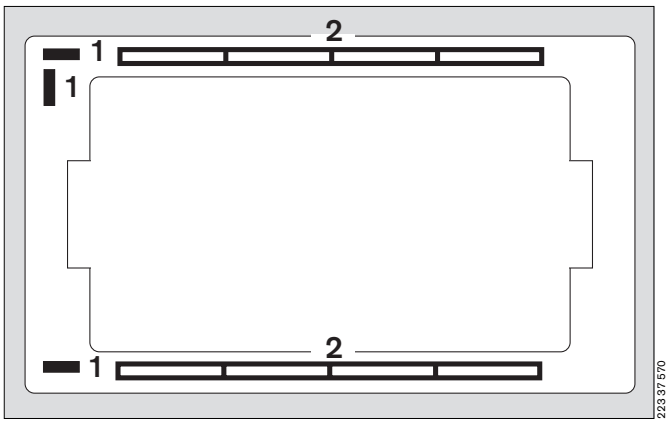

Operating concept

Control unit

Hard Keys

these permanently defined keys enable the user to select various functions of Caleo®:
3 Scales*
4 Bed tilt
5 Menu selection/configuration
6 Changeover key: air/skin temperature control
7 Trend display
8 Suppress alarm tone
9 Lock key pad function
10 Rotary knob

Visual signals indicate alarm situations

11 Red alarm LED
12 Yellow alarm LED
13 Power failure alarm

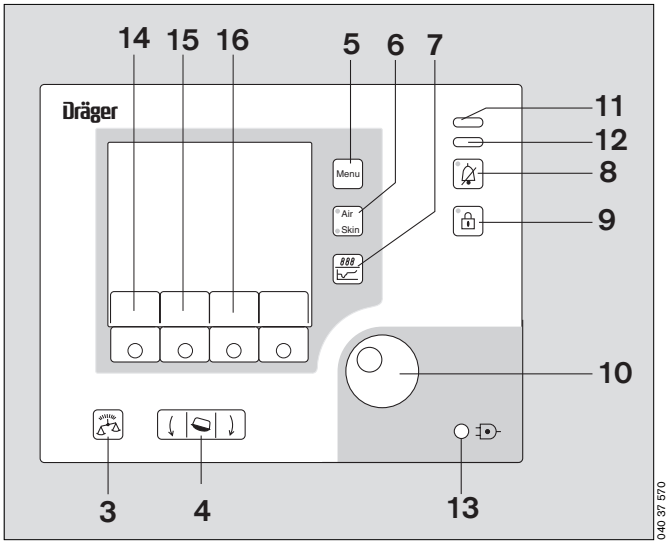

Soft Keys

These keys, with variable functions defined by different labels on the screen, guide the user through the specific routines of the unit, from preparing for use to shutting down the unit. Depending on the current menu, different soft keys with varying functions and labels are activated.
Only the soft keys required for the current menu actually appear. This precaution keeps the display clear, preventing any confusion for the user.
When a soft key is pressed, its function is activated and the relevant menu is displayed on the screen.
In the standard screen, the soft key labels are as follows:
14 Air/skin temperature
15 Humidity*
16 O_2*

* optional equipment feature

Rotary knob

A single rotary knob is used to select and set parameters.

- Turn knob = select
- Press knob = confirm

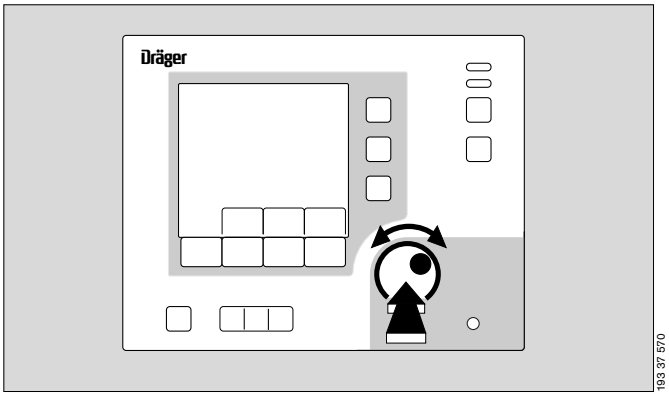

Screen

By default, the measured values are displayed as numeric values (standard screen).

– Set values and actual measured values for air temperature/skin temperature
– Set values and actual measured values for relative humidity*
– Set values and actual measured values for O_2 concentration*
– Alarms and warnings

The screen display can also include a trend graph.

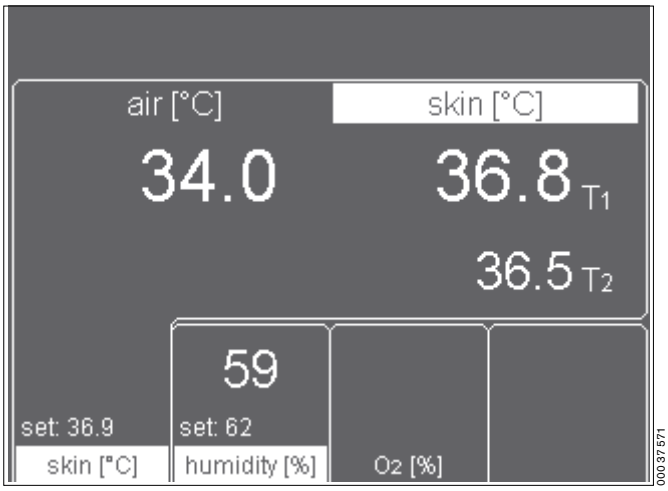

* optional equipment feature

Preparation

Contents

Preparation 12

Before using for the first time 12
Mounting the accessory equipment 12
Doors, ports and bed 18

Checking readiness for operation 26

Before using for the first time 26
Before each use 26

Preparation

Before using for the first time

- Check that all packaging materials have been completely removed (see packing slip in the pack).
- Check that the mains power supply voltage matches the voltage rating specified on the nameplate (see page 125).
- Check that the altitude above sea level is correctly set (see page 73).

1 Screw the extension pole fully into the base frame and tighten firmly. Check that it is securely held in place.
2 Slide the holder over the pole and secure it at the required working height with the clamping screw.
3 Set the control unit to the desired working position and clamp it securely to the holder with the locking screw.

Make sure that the swivel zone is clear.

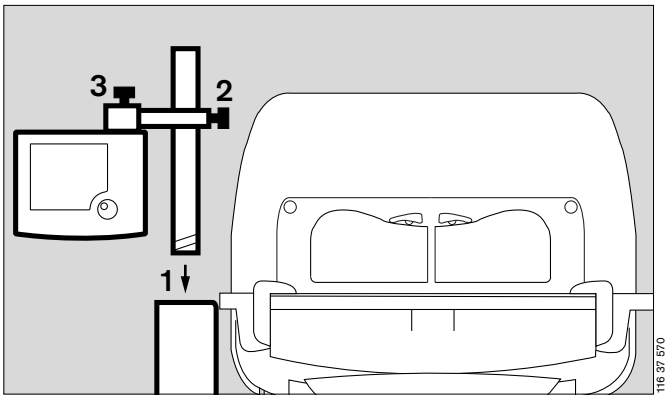

Mounting the accessory equipment

When fitting accessories, please note:

- The accessory equipment must not collide with the unit when adjusting the tilt angle and height of Caleo®.
- The accessory equipment on the handle side must not move with the main unit during height adjustment of Caleo® (page 109).

Screw on
pole 38 mm/600 (2M 50 691) or alternatively
pole 38 mm/310 (2M 50 688) or alternatively
pole 25 mm/600 (2M 50 689).

- Remove the cover plate from the base frame.
- Screw the pole fully into the base frame and tighten firmly. Check that it is securely held in position.

Observe the maximum loads.
Danger of overturning the unit!

Pole 38 mm/600	10 kg
Pole 38 mm/310	10 kg
Pole 25 mm/600	3 kg

Distance between the loads and the pole: max. 150 mm.

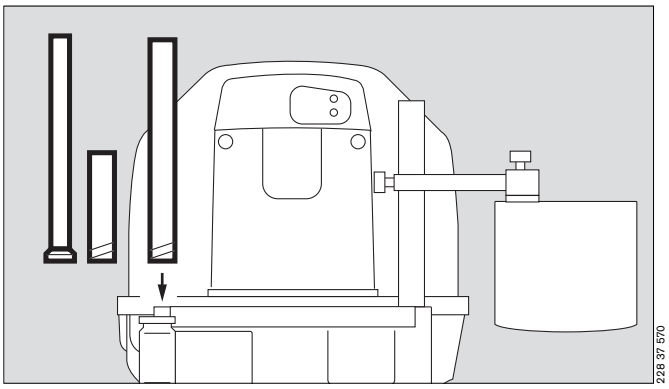

Moving the control unit to the opposite side

for pole, 38 mm

1 Remove the control unit = loosen the clamping screw.
2 Remove the holder = loosen the clamping screw.
- Move the holder to the other pole and set to the desired working height.

2 Fix the holder in position = tighten the clamping screw.
1 Secure the control unit to the holder = tighten the clamping screw.

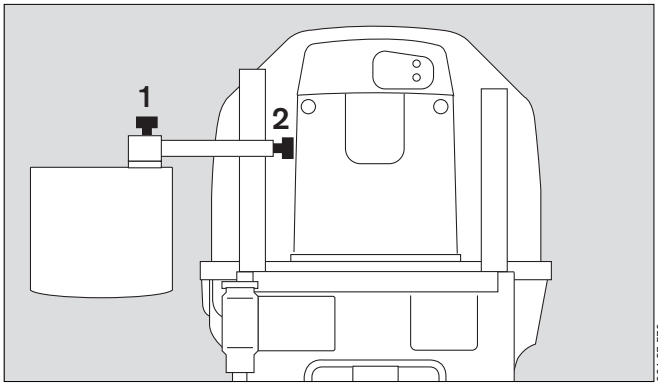

Mounting the control unit on the handle side

Only technically qualified personnel may move the control unit from the wall side to handle side or vice versa.

- Fit the basic pole (2M 50 680), see page 15.
- Screw in the extension pole 38/600 (2M 50 691) or pole 38/310 (2M 50 688).
- Refit the control unit as specified in the Assembly Instructions.

- The cable to the control unit must not be removed from the cable guides on the basic pole.
- Make sure there is sufficient space to swivel and tilt the unit.

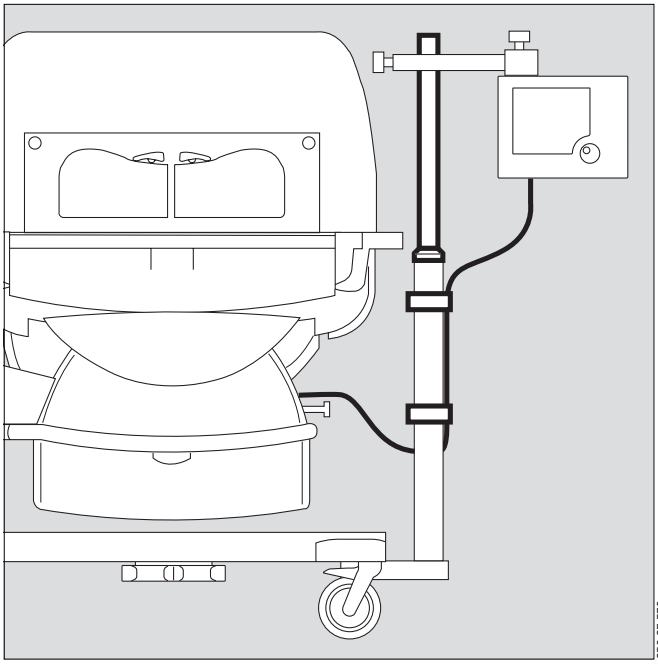

Infusion support (2M 21 514)

for pole, 38 mm
Max. load per hook 3 kg

- Push the fixing claw onto the pole.
- Push the infusion holder into the fixing and secure it firmly with the clamping screw.

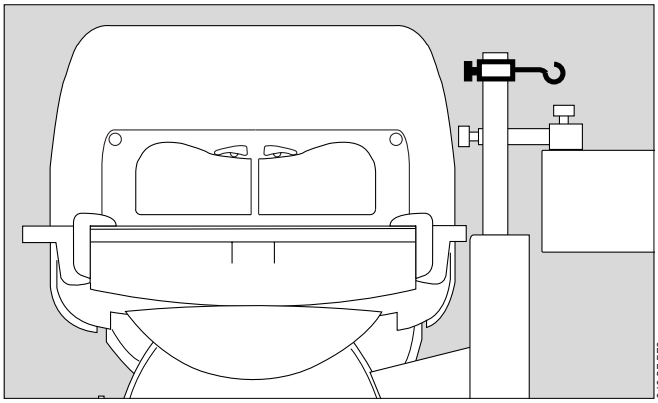

Swivel table (2M 21 186)

for pole, 38 mm
For small parts, max. load 3 kg

- Place the clamp of the swivel table on the stand pillar and tighten the clamping screw.

Make sure that the swivel zone is clear.

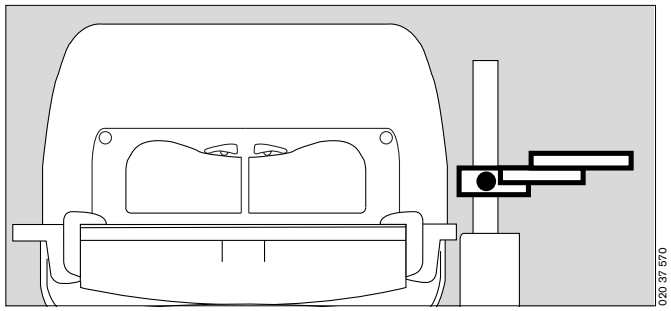

Compact rail (2M 85 337)

for pole, 38 mm
Max. load 5 kg.
This rail must only be mounted by qualified technical staff.

For holding accessories, e.g.
– O_2 monitor

- Adjust the height of the compact rail to the required height of the mounted accessory.

1 Fit the compact rail to the pole = push the compact rail over the pole and
2 fasten with the screws.

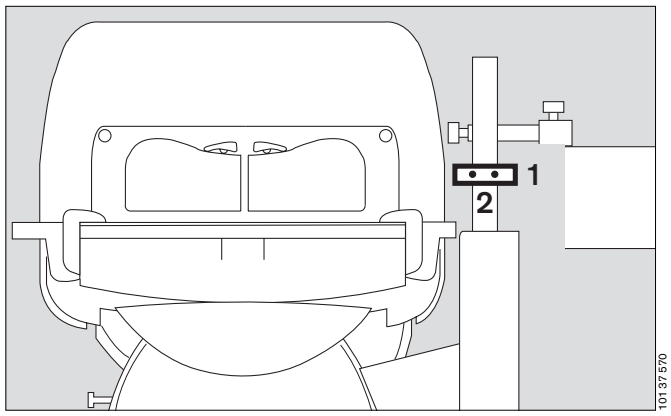

Bronchial aspiration system (2M 85 125)

Follow the separate Instructions for Use of the bronchial aspirator.

- Fix the bronchial aspirator holder to the standard rail on the wall side or handle side.
- Tighten the clamping lever.
- Establish the hose connections.

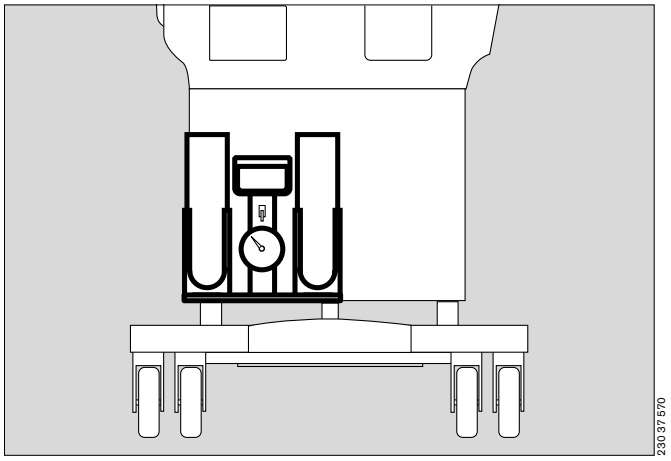

Basic pole (2M 50 680)

Maximum load 10 kg
This pole must only be mounted by qualified technical staff!

- Mount as specified in the Installation Instructions.

For fixing accessories, e.g.
– additional pole extensions, see page 15.
– swivel table (2M 21 186), see page 14.
– monitor support plate (2M 50 085), see page 16.

Distance of the loads to the pole, max. 150 mm.

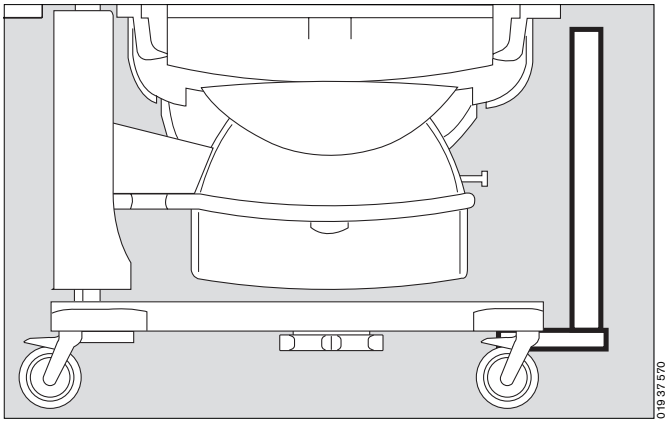

Tray 3020 (M 24 678)

Maximum load must not exceed 2 kg!

- Hang the tray from the standard rail on the wall or handle side and secure in position.

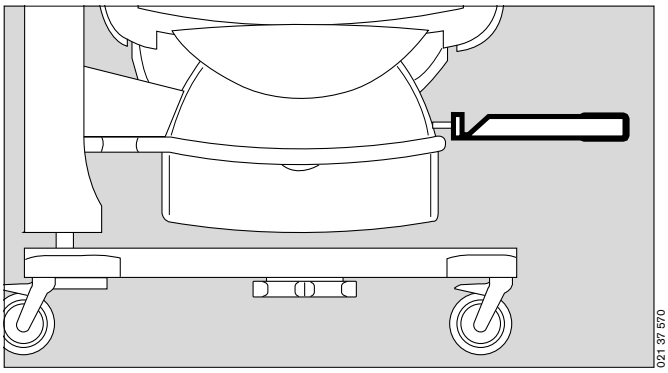

Pole extensions

The following poles can be fixed to the base pole as extension:
– Pole 38 mm/600 (2M 50 691) or
– Pole 38 mm/310 (2M 50 688) or
– Pole 25 mm/600 (2M 50 689).

- Screw the pole into the base pole as far as it will go and tighten securely. Make sure that it is securely held in place.

Observe the maximum loads:

Pole 38 mm/600	5 kg
Pole 38 mm/310	5 kg
Pole 25 mm/600	3 kg

Distance between the loads and the pole: max. 150 mm

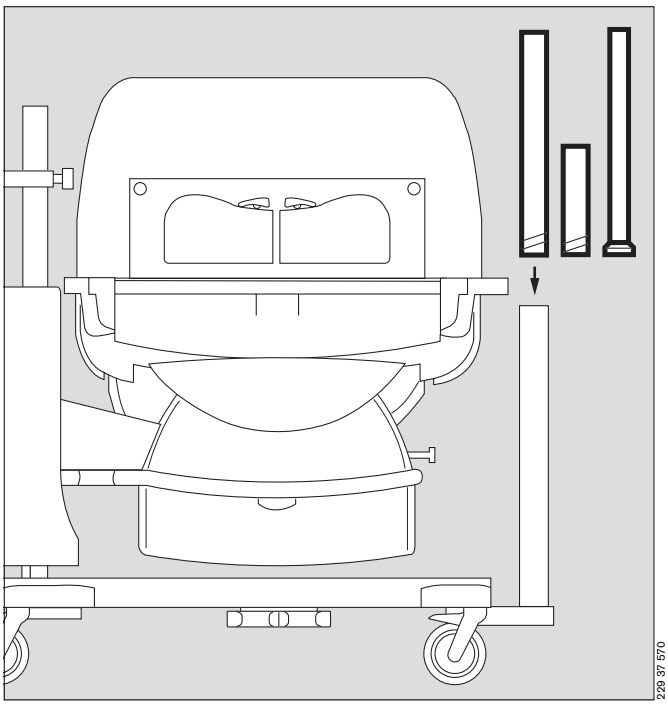

Notebook holder (2M 22 171)

Maximum load must not exceed 3 kg!

1 Fix the holder to the handle rail of the Caleo®.
2 Align the holder horizontally with the clamping screw.

- Check that the holder is securely fixed in position and that the swivelling mechanism is functioning correctly by turning and tilting the support plate.

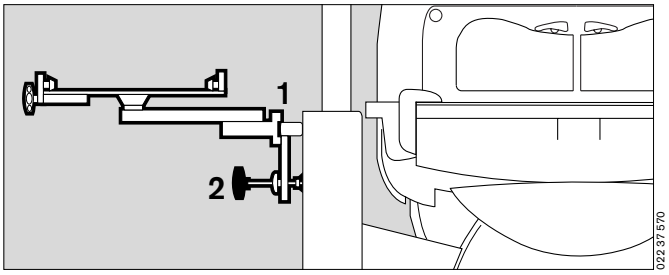

Monitor shelf (2M 50 085)

The monitor tray can be mounted on the wall side and/or the handle side.
Maximum load must not exceed 20 kg!
Shelf for monitor and ventilation equipment.
This monitor shelf must only be mounted by qualified technical staff!

To fix the monitor shelf:
– on the wall side, fit a second 38 mm pole (see page 12),
– on the handle side, fit a second base pole (see page 15) with a 38 mm pole extension (see page 15).

- Mount the shelf as specified in the Installation Instructions.
- Fit the monitor holder = slide the shelf over both 38 mm poles and

3 fix in place with the screws.

Do not exceed the maximum installation height.

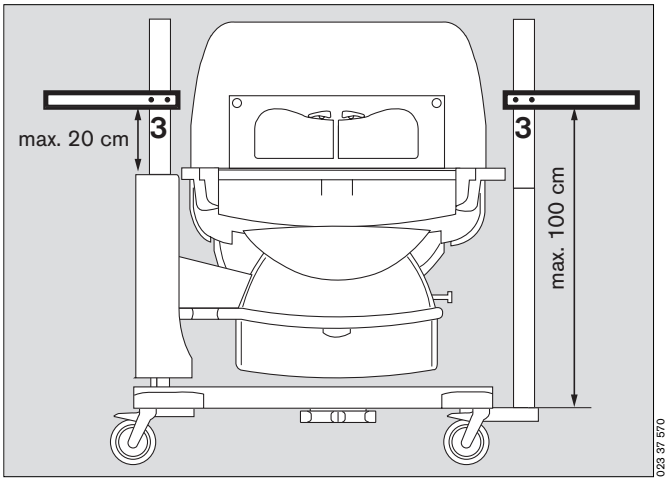

Hose holder for ventilation hoses (84 11 075)

- Open the front flap.
- Raise the bed and pull it out of the incubator.
- Push the mattress slightly to one side.
- Place the hose holder in the mounting hole in the bed and fasten from underneath with the locking screw.
- Replace the bed in the incubator and close the front flap.

The hose holder can be fixed to any of the four corners of the bed.

4 Clip the ventilation hoses and cables into the clips at the end of the ventilation hose holder.

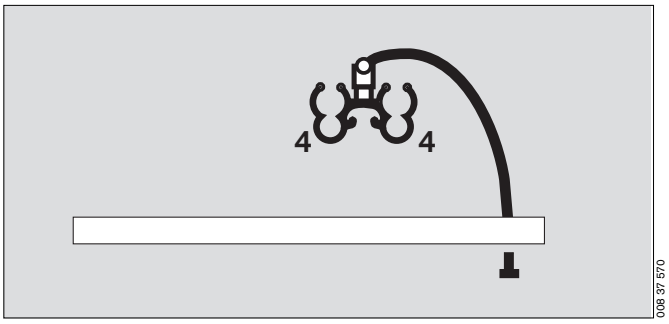

O_2 enrichment with O_2 control*

1 Screw the O_2 connection hose to the underside of the incubator. **Make sure that it is tightened securely.**
- Connect the probe to the outlet of the central O_2 supply pipeline in the "park" position (see separate Instructions for Use).
  The permissible gas pressure is between 300 and 500 kPa.

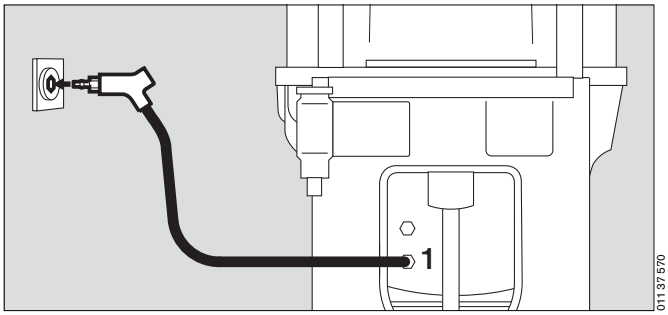

O_2 monitor

To monitor the O_2 concentration, use an O_2 monitor that has alarm limits:
- Fix the O_2 monitor to the handle rail with the holder.
- Place the sensor capsule in Caleo®.
- Route the sensor cable through one of the flexible tubing ports. Where applicable, push the sensor plug into the socket of the O_2 monitor (e.g. Oxydig or MiniOx 3000) until it audibly clicks into place (see separate Instructions for Use of O_2 monitor).

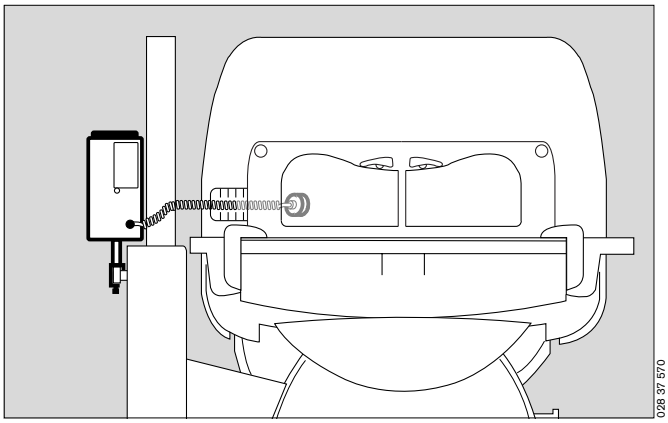

Vacuum mattress (2M 17 909)

The contour of the vacuum mattress can be altered as required and is then maintained after air evacuation of the mattress. Extreme positions can therefore be obtained for special applications. The mattress can remain in the incubator.
- Open the front flap.
- Insert and preform the vacuum mattress.
- Place the patient on the mattress and finally adjust the mattress to the desired shape.
- Connect the vacuum mattress to the hose of the suction system.

2 Open the valve and evacuate the vacuum mattress.
2 Close the valve and disconnect the hose.
- Close the front flap.

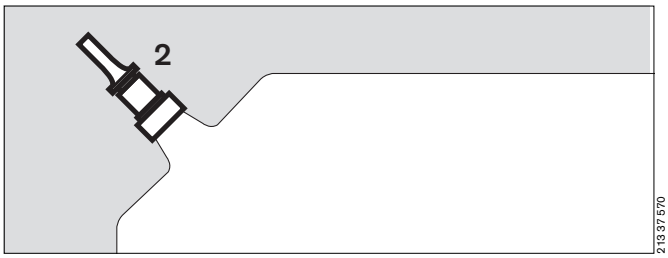

Fitting the drawer (2M 50 565)

Maximum load must not exceed 7 kg.
The drawer must only be mounted by qualified technical staff!

- Mount as specified in the Installation Instructions.
- Fit the drawer = slide the drawer box into the groove in the base frame.

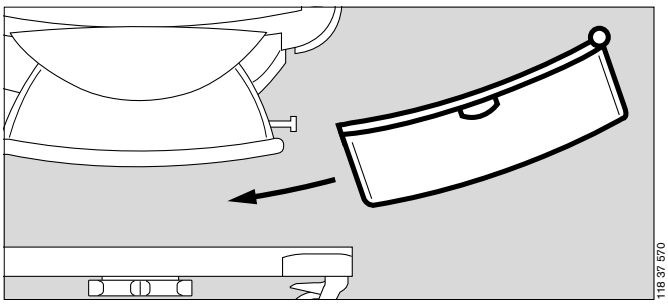

* optional equipment feature

Doors, ports and bed

Hand ports

To open the hand ports:
1 Press the catch: the relevant hand port swings open.

To close the hand ports:
- Push the hand ports back into place until the catch engages.

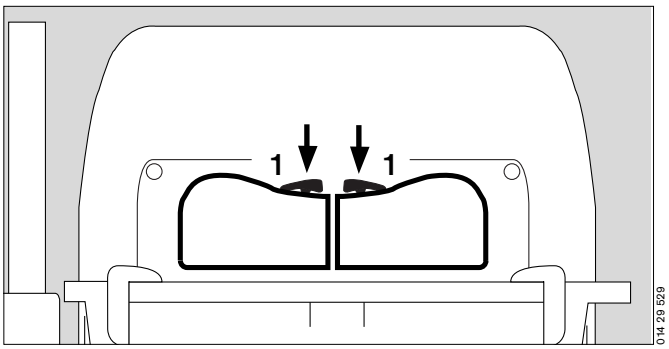

Front flap

To open the front flap:
2 Turn the two knobs inwards to the vertical position. The red latch becomes visible.

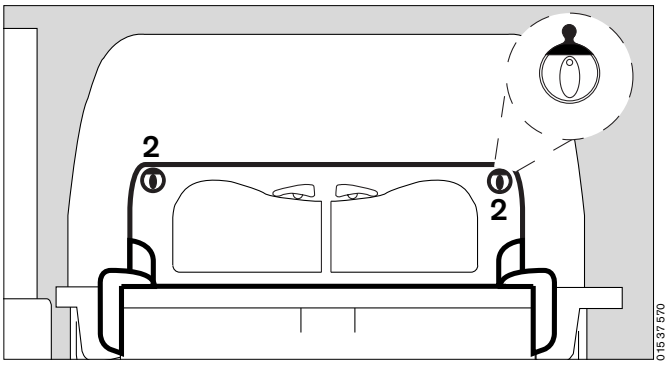

- Lower the front flap until it hangs down vertically towards the floor.

Avoid pinching or jamming hoses and cables in the removable double wall!

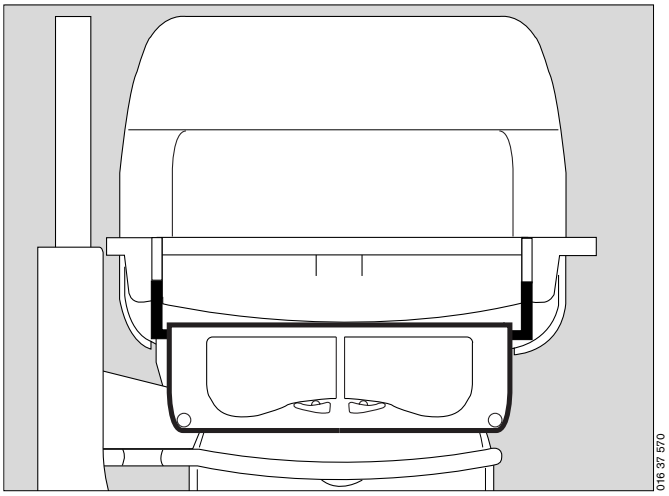

To close the front flap:
- Raise the front flap and press into position,

3 Turn the two knobs outwards to the horizontal position until you feel them click into place.

Make sure that both knobs are engaged in position!
The red latches must no longer be visible!

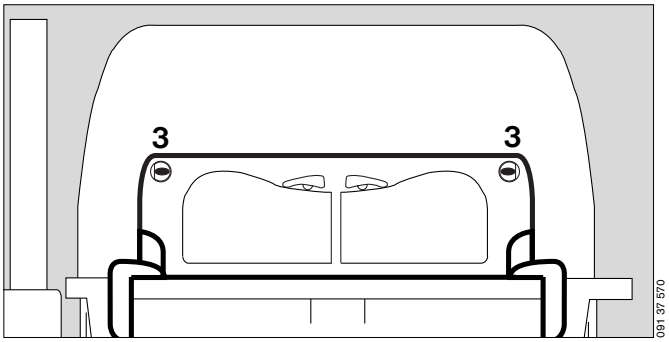

Side flap

- The side flap is opened and closed in the same way as the front flap (see page 18).

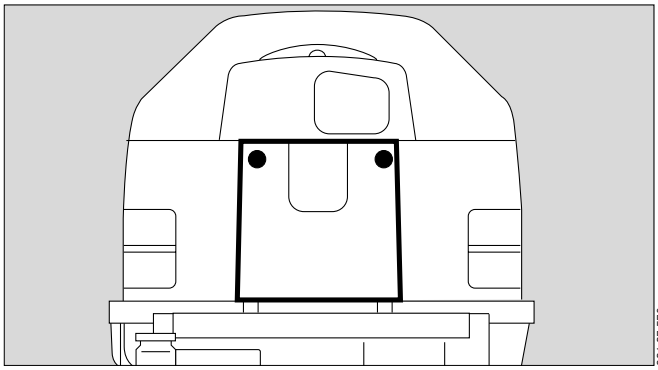

Canopy

To open the canopy:
1 Grasp the handle on the canopy
and
2 lift open (approx. 60°).

Do not tilt the canopy forwards!

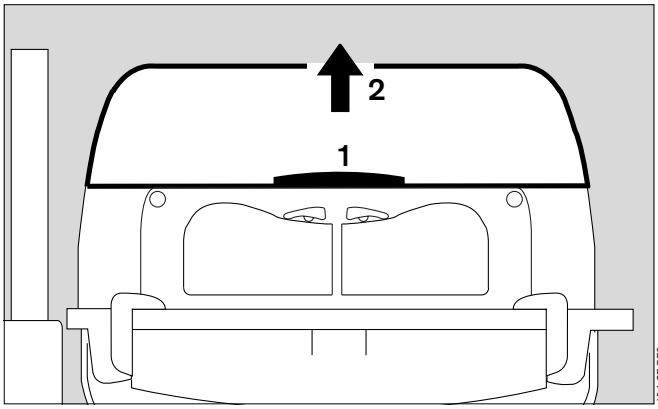

3 Raise the side support prop, and lower the canopy until the prop is fixed in the slot of the canopy.

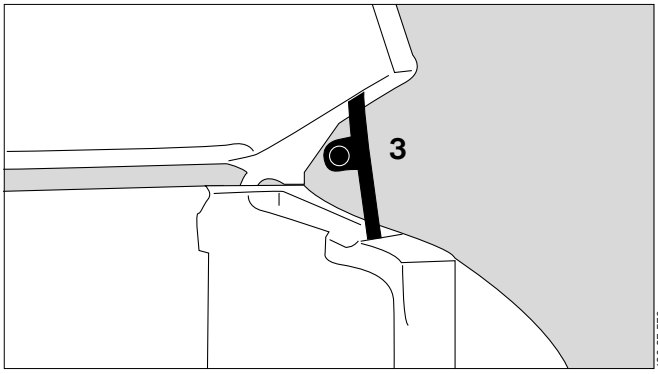

To close the canopy:
1 Grasp the handle on the canopy and raise it slightly.
3 Fold down the prop
and
- close the canopy.

The canopy can be opened from both sides.

To remove the canopy:
4 Grasp the handles on the sides of the canopy with both hands.
5 Lift the canopy horizontally off the pillar elements.

To replace the canopy:
5 Replace the canopy horizontally, so that the guide pins fit into the holes in the pillar element.

Take care with the sensor unit!

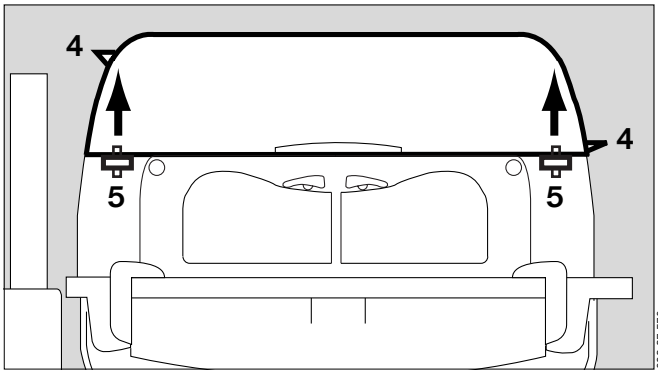

Double wall*

To remove the double wall:

- Remove the canopy and lay it upside down (on a soft, non-abrasive surface).

1 Squeeze the double wall inwards slightly, and
2 release the oblong holes of the double wall from the retaining lugs in the canopy.

- Pull the double wall out of the canopy.

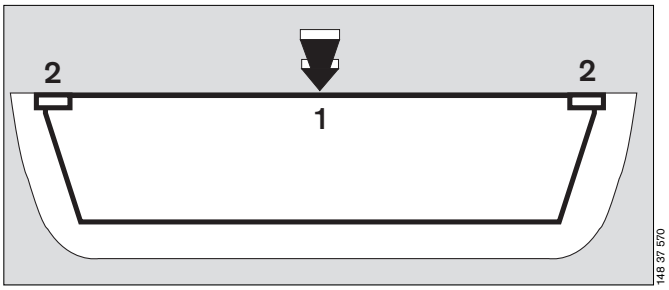

To install the double wall:

- Place the canopy upside down (on a soft, non-abrasive surface).
- Insert the double wall in the canopy.

3 On one longitudinal side, fit the retaining lugs of the canopy into the oblong holes of the double wall.

- Squeeze the double wall inwards slightly and fit the retaining lugs on the second longitudinal side of the canopy into the oblong holes of the double wall.

- Turn the canopy the right way up again.
  The retaining lugs of the canopy must remain seated in the oblong holes.

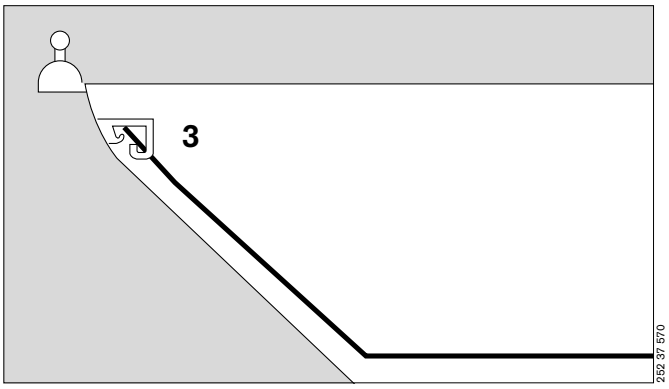

Removing the bed

Maximum load must not exceed 5 kg

- Open the front flap and fold it down.

Pull the bed out:

4 Set both knobs horizontally to the position marked ,
5 Pull the bed out towards the front as far as it will go, holding it by the recessed handle or by the knobs.

When the bed is pulled out, the patient must be monitored constantly to prevent the risk of a fall.

Do not lean or rest any weight on the bed when it is pulled out.

- After completing the care procedure, push the bed back in until it engages. Turn the knobs to the position and close the front flap.

Push the bed all the way in! Otherwise the hot air duct will be interrupted, and the patient may be warmed or cooled excessively!

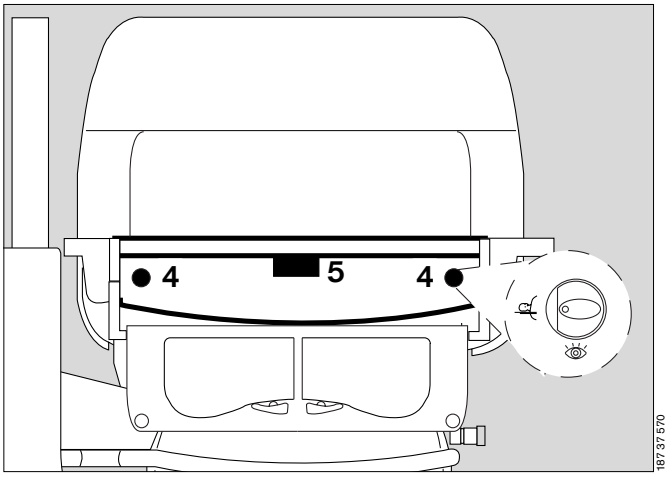

* optional equipment feature

Using the X-ray drawer

The X-ray drawer can be pulled out when the front flap is either open or closed.

To open the X-ray drawer:
1 Set both knobs vertically to the position marked ,
2 pull the drawer out by the recessed handle or the knobs.
● Insert or remove the X-ray cassette. Recesses are provided in the X-ray drawer for positioning.

Do not use the X-ray drawer as a writing support or bed for the patient.

To close the X-ray drawer:
2 push the drawer inwards under the bed until it tangibly clicks into place.

Push the X-ray drawer in fully! Otherwise the hot air duct will be interrupted, and the patient may be warmed or cooled excessively!

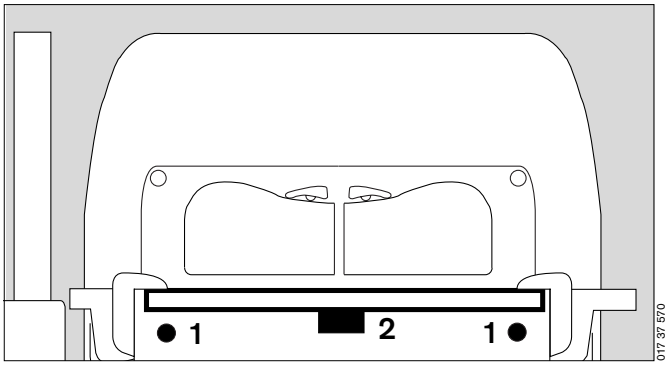

Sealed through-holes

3 Tubing ports (2M 50 412)
4 Tubing grommets (2M 50 385)
5 Feeding grommet, hood (2M 50 352)

● Route the cables or hoses through the flexible grommets and sleeves.

To route ventilation hoses and cables through the Caleo®, use the ventilation hose holder (page 16).

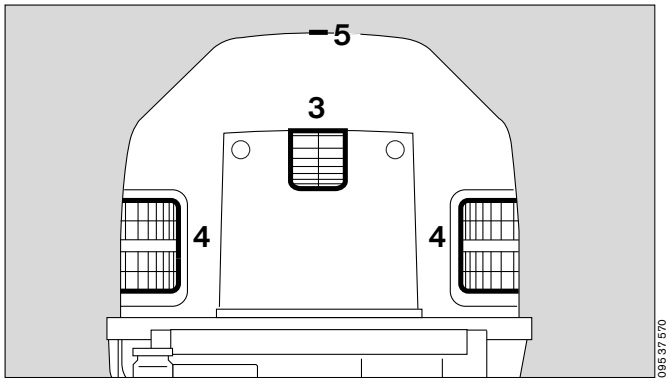

Drawer (2M 50 565)

Drawer for storing items required for nursing or treatment. The drawer is accessible from both sides.

Open the drawer:
6 grasp the drawer by the handle and pull it out as far as it will go.

● Place the required material in the drawer.

Close the drawer:
6 push the drawer back in by the handle.

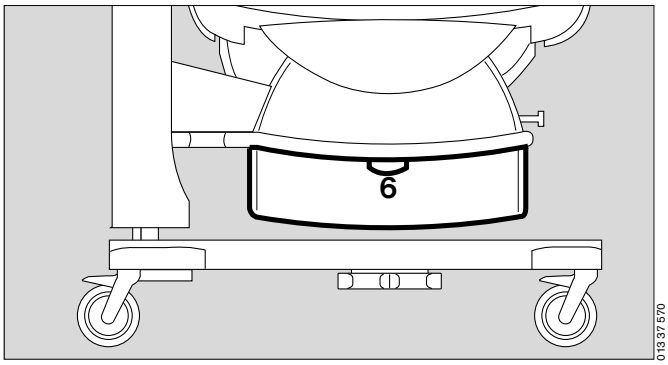

Trolley (base frame) with variable height adjustment *

To use the height adjustment facility:

- Switch on Caleo® (see page 37).

1 Press the left pedal – Caleo® is lowered.
2 Press the right pedal – Caleo® is raised.

- Adjust to a comfortable working height.

When the height stops changing, the frame is at its end position. Release the pedal.

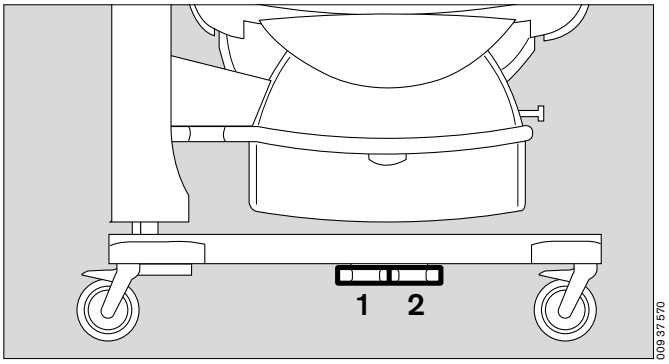

Hoses and cables must be long enough so that they do not kink, tear or become squashed!

Do not store anything under the drawer!

The height adjustment and tilt angle adjustment cannot be operated at the same time!

The height adjustment can only be operated for max. 6 minutes during one hour.

Trolley castor with direction lock

- Activate the lock lever: the castor will be locked in the lengthways direction (longitudinal axis of device).

The castor with direction lock does not have a brake. When parking the unit, apply the brakes of all braked castors.

The castor with direction lock is visually distinct from the castors with brakes.

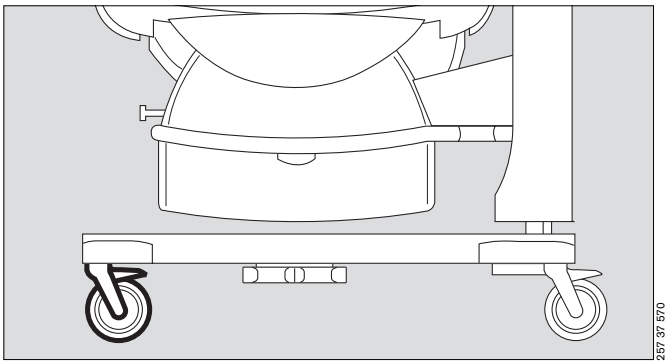

* optional equipment feature

Tilting the bed

To tilt the bed:

- Switch on Caleo® (see page 37).

1 Press button = the bed will be lowered on the sensor unit side.
2 Press button = the bed will be raised on the sensor unit side.

- Adjust the bed to the required tilt angle.

The end position is reached when the tilt angle stops changing. Release the button.

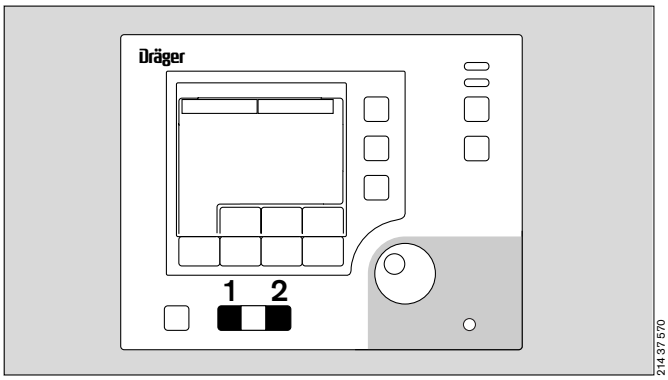

The entire housing of the Caleo® incubator is tilted.

Hoses and cables must be carefully routed so that they do not kink, tear or become squashed!

The height adjustment and tilt angle adjustment cannot be operated at the same time!

Do not reach in between the housing and housing support during adjustment. Danger of injury!

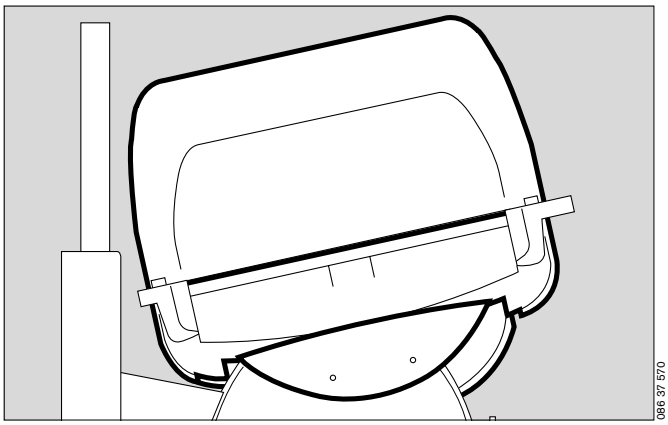

Setting the bed to the horizontal position

- Caleo® must be switched on (see page 37).

1 Press button = the bed will be raised on the control unit side.
2 Press button = the bed will be lowered on the control unit side.

The spirit levels show whether the bed is horizontal.

3 Spirit levels for the horizontal position of Caleo® in the transverse axis.
4 Spirit level for the horizontal position of Caleo® in the longitudinal axis. When using the integrated scales (optional, see "Weighing scale" on page 78), make sure that the unit is on a flat floor before setting.

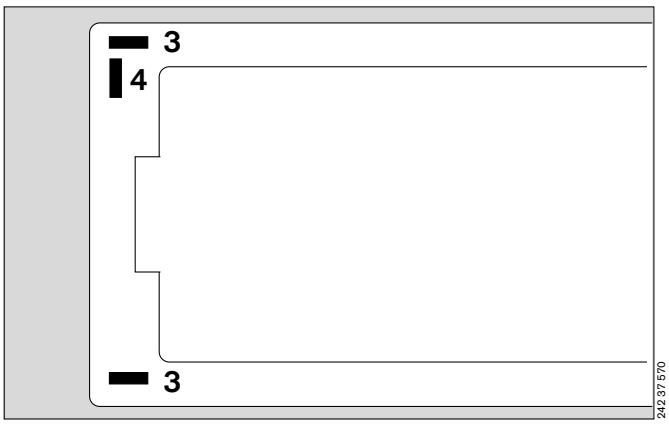

Using humidifier systems

⚠ **Only use distilled and sterilised water (Aqua dest.)!**

Water container (2M 50 040):

- Disinfect hands.

1 Open the water container = lift up the cap.

- Fill the water container with sterilised Aqua dest.

Do not use any additives!
Capacity: **2.8 L** (note level marks)

1 Close water container = push down the cap.

- Prepare a fresh connection tube (MX 17 018).

2 Close the clamp on the connection tube.
3 Pierce the silicone nozzle of the water container with the pin of the connection tube.
2 Open the clamp on the connection tube.

- Bleed the connection tube (let distilled water drain off).

2 Close the clamp on the connection tube.

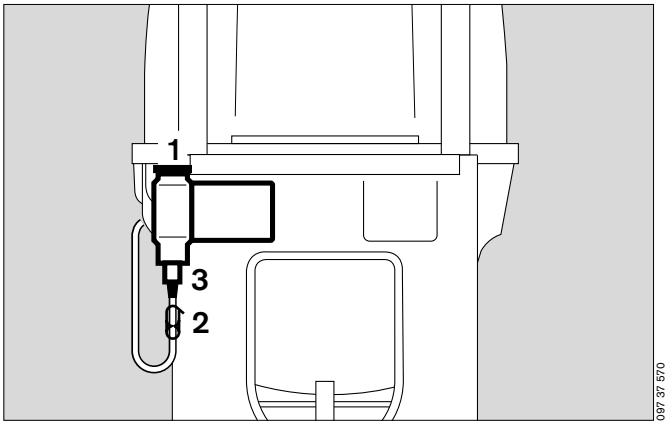

4 Connect the LuerLock connection to the water connection pipe.
5 Open the clamp on the connection tube.

- Switch on the humidification module on Caleo® and set the humidity value (page 51).

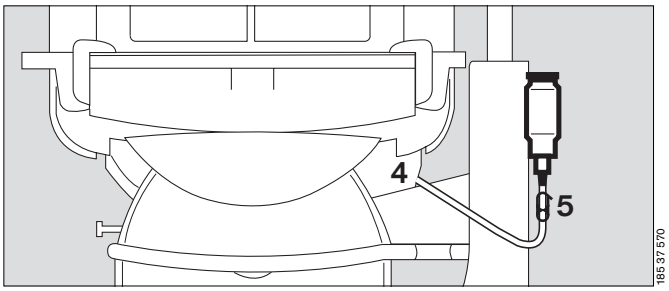

Water bag:

Use only sealed bags with sterilised Aqua dest. (destilled water)!
Do not use any additives!
Must not be confused with infusion solutions!

- Disinfect hands.
- Prepare a new connection tube (MX 17 018) and a water bag with sterilised Aqua dest.

6 Close the clamp on the connection tube.

- Insert the pin of the connection tube into the connector of the water bag.

6 Open the clamp on the connection tube.

- Bleed the connection tube (let distilled water drain off).

6 Close the clamp on the connection tube.
7 Connect the LuerLock connection to the water connection pipe.
6 Open the clamp on the connection tube.

- Switch on the humidification module on Caleo® and set the humidity value (page 51).

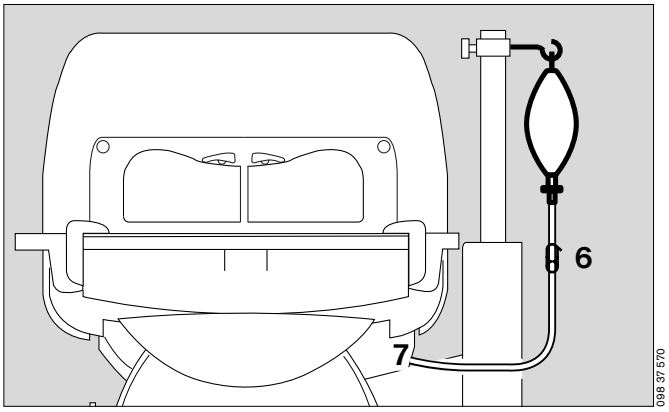

Replacing the water bag:

Distilled water bag empty = the water shortage alarm on Caleo® is triggered.

- Disinfect hands.
- Close the clamp on the connection tube.
- Replace the water bag and reopen the clamp.

Integrated socket strip

The integrated socket strip can be used to connect
- infusion pumps and
- SpO_2 measuring equipment.

Connections may only be made by qualified technical staff.

Caleo does not monitor the power supply to external devices.

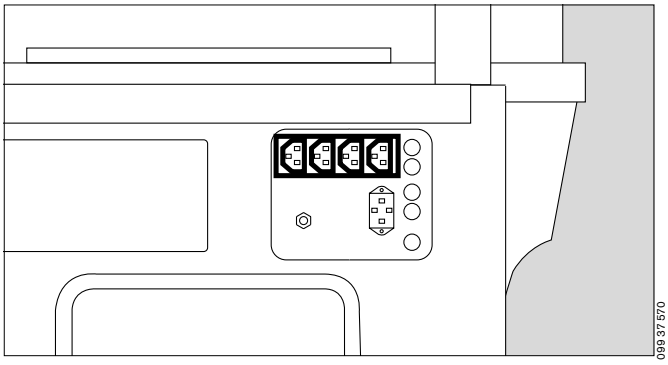

⚠ Do not exceed the maximum power input of the connected accessories (all 4 sockets together: max. 2A). The maximum permissible total leakage current must not be exceeded. For the leakage current of Caleo® without socket strip, see "Technical Data" on page 106.

Checking readiness for operation

Before using for the first time

- Check that the mains voltage supply corresponds to the voltage rating on the nameplate (see page 125).
- Check that the altitude above sea level is correctly set (see page 73).

Before each use

- Check that the equipment has been disinfected and cleaned in accordance with the conditions laid down by the hospital (see "Disinfecting/Cleaning/Sterilising" on page 84).
- Check that an adequate gas supply is available for the equipment to be used.
- Check that the required accessories and therapy equipment are available and in perfect condition.
  Only use parts that have been stripped down and sterilised.
  Check readiness for operation in accordance with the relevant Instructions for Use.
- Check that there are no cracks or sharp, chipped edges on the incubator canopy.
- Check that the hinges and catches on the canopy are in proper working order.
- Check that the cables and hoses have been routed correctly and safely.
- If the control unit is mounted on the handle side, check that the cable to the control unit is routed through the cable guides on the basic pole.
- Check that there is sufficient space for adjusting the tilt and height.
- Connect to the mains supply.
- Check that the slits of the sensor unit are not fouled.

Do not use multiple-plug adapters for the Caleo® power supply!
The patient leakage current may rise above the permitted limits if the protective earth conductor fails when equipment is connected to the socket strip. The risk of electric shocks cannot be excluded in such cases.

Before using the unit, make sure that the following tests have been performed:

Disinfect hands before each test!

Check that the hand ports are secure

1 Open hand port = press catch
- Close hand port until the catch engages.
- Pull the edge of the hand port – it must not open.

If the hand port fails to remain engaged:
- Call DrägerService.

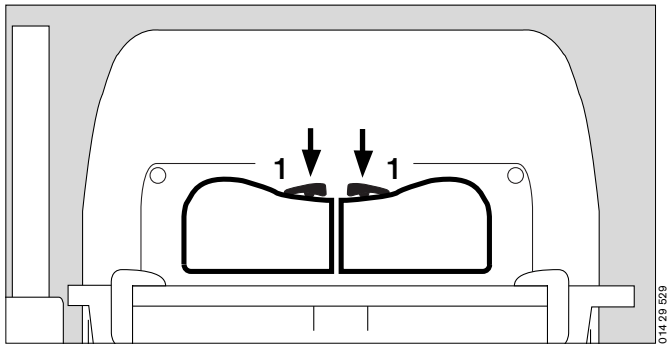

Check that the front flap is secure

- Open the front flap and fold it down (see page 18).

1 Raise and press the flap closed and turn the two knobs outwards until they tangibly engage in the horizontal position.

Make sure that both knobs are engaged!
The red latches must no longer be visible!

If the front flap fails to remain engaged or if the red latches are visible:

- Call DrägerService.

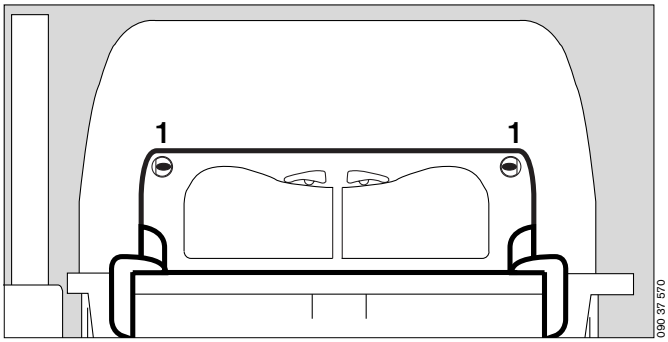

Check that the side flap is secure

- Open the side flap and fold it down (page 19).

2 Fold up the side flap and press it closed. Turn the two knobs outwards until they tangibly engage in the horizontal position.

Make sure that both knobs are engaged!
The red latches must no longer be visible.

If the side flap fails to remain engaged or if the red latches are visible:

- Call DrägerService.

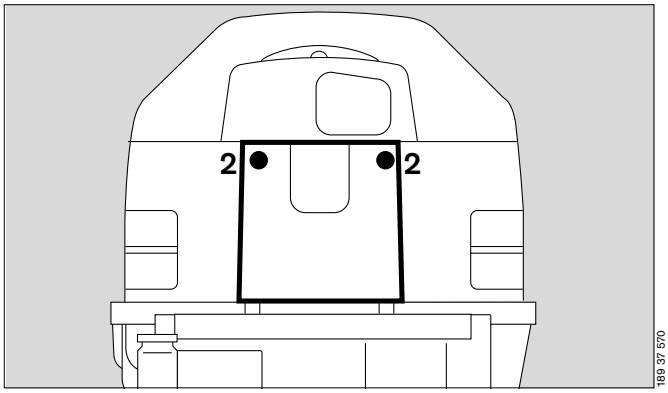

Check that the canopy is secure

3 Grasp the handle and open the canopy.

4 Lift open the flap (approx. 60°).

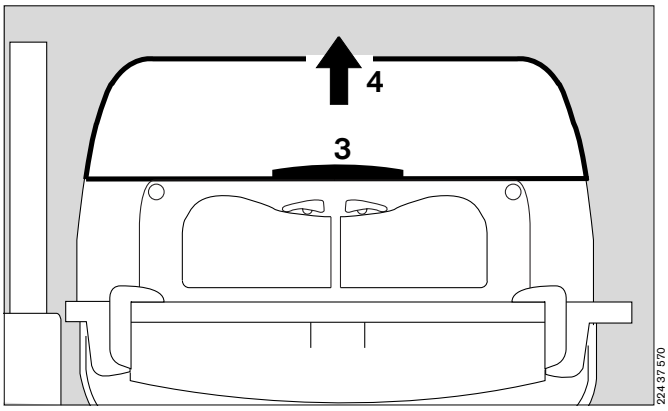

5 Raise the side prop.

- Lower the canopy until the prop is secured in the slot of the canopy.
- Repeat the test on the other side.

If the canopy fails to remain open:

- Call DrägerService.

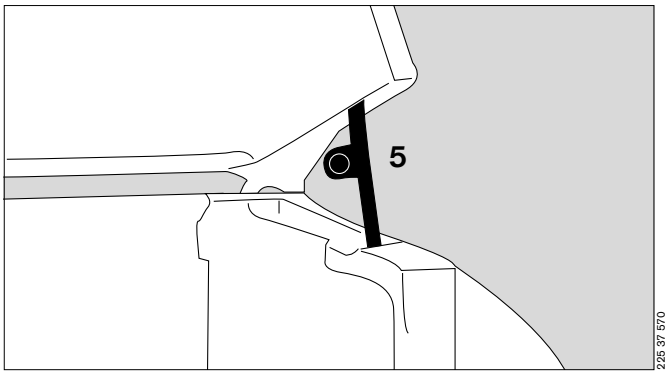

1 Grasp the handles on the sides of the canopy with both hands.
2 Lift the canopy horizontally off the pillar elements.

If the canopy holders are damaged:
- Call DrägerService.

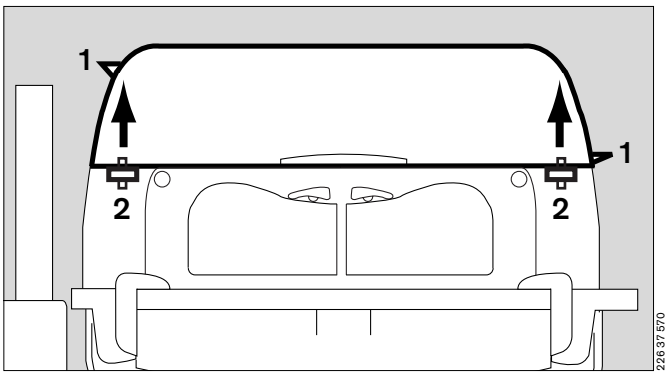

Check that the double wall is securely in place

- All 4 retaining lugs in the canopy must be seated in the oblong holes of the double wall.

If the double wall or the retaining lugs in the canopy are damaged:
- Call DrägerService.

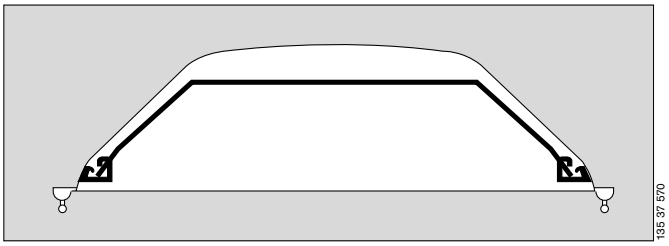

Check that the trough is secure

- Remove the canopy.
- Remove the mattress.
- Remove the bed.

3 Check the catches of the trough.
- Place the bed on the trough.
- Place the mattress on the bed.
- Refit the canopy.

If the catches for the trough are damaged:
- Call DrägerService.

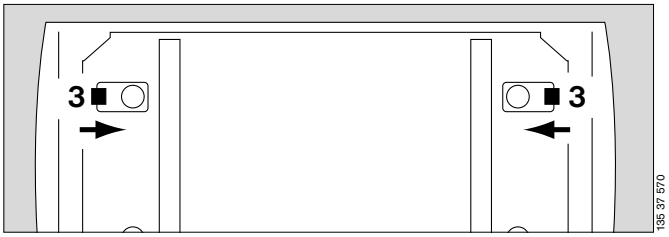

Remove the bed

- Open the front flap and fold it down.

4 Set both knobs horizontally to the position marked ,
5 Grasp the bed by the recessed handle or by the knobs and pull it out towards the front as far as it will go.
5 Push the bed back until it clicks into place,
4 turn the knobs to the position.
- Close the front flap.

If the bed cannot be pulled out or pushed in or if the knobs are damaged:
- Call DrägerService.

If the bed is not fully pushed in, the hot air duct will be interrupted, causing the control system to malfunction! The result may be excessive cooling or overheating of the patient!

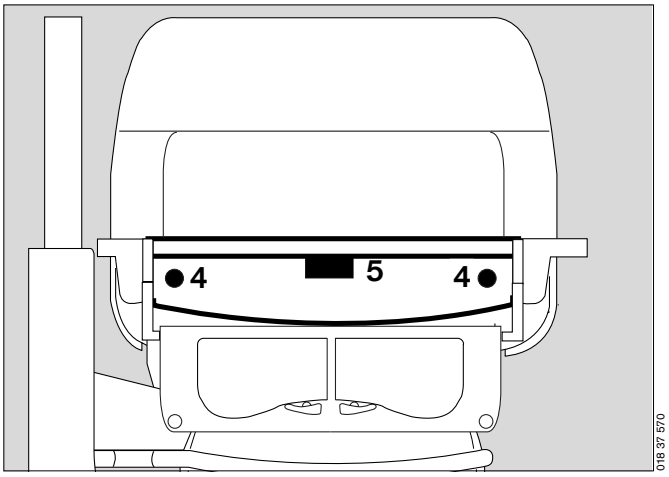

Activate the self-test, check audible warning tone

1 Switch on the unit = press the on/off switch until it clicks into position.

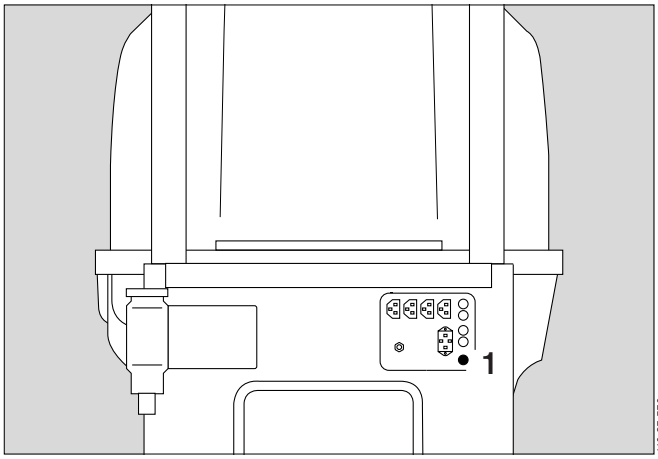

During the self-test, the functions of the machine are checked.

The audible signal, alarm beep sequence, screen displays and LEDs must be checked by the user.

– An audible warning signal and an alarm beep sequence are sounded.

If the warning signal or alarm beeps are not sounded,

- Call DrägerService.

– The screen and LEDs initially go dark and are then lit.

If individual pixels fail to light up or screen images are burnt, or if the LEDs fail to light up,

- Call DrägerService.

– The opening screen is displayed.

If the opening screen is not displayed,

- Call DrägerService.

The unit is switched on.

Check the bed tilting mechanism

1 Tilt the bed.

During the tilting process, the entire housing of the Caleo® must move uniformly. If not:
- Call DrägerService.

Do not reach in between the housing and the housing support while the unit is moving! Risk of injury!

2 Return the bed to the horizontal position (see page 23).

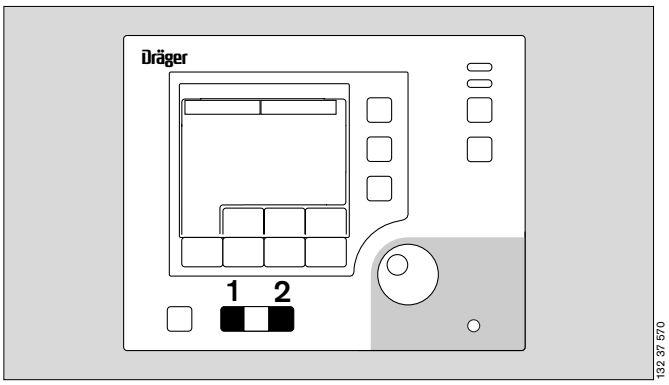

- The spirit levels in the bed show whether the bed is horizontal. This check is especially important when using the built-in weighing scales (see page 78)!

If the spirit levels are damaged:
- Call DrägerService.

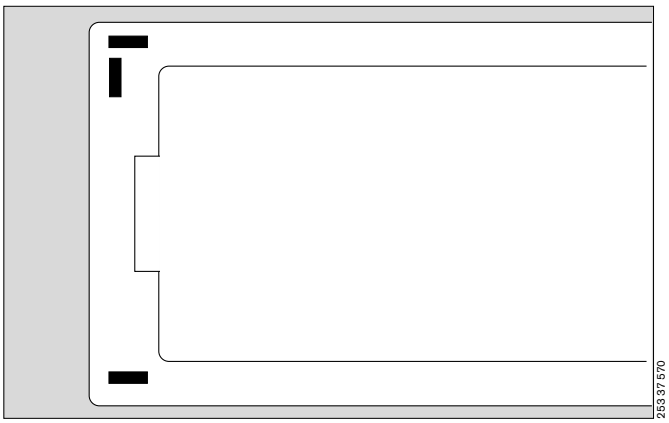

Check the height adjustment mechanism*

- Operate both foot pedals in succession to raise and lower the Caleo® (see page 22).
- Then adjust to a comfortable working height.

When adjusting the height, the entire housing of the Caleo® must rise or descend uniformly. If not:
- Call DrägerService.

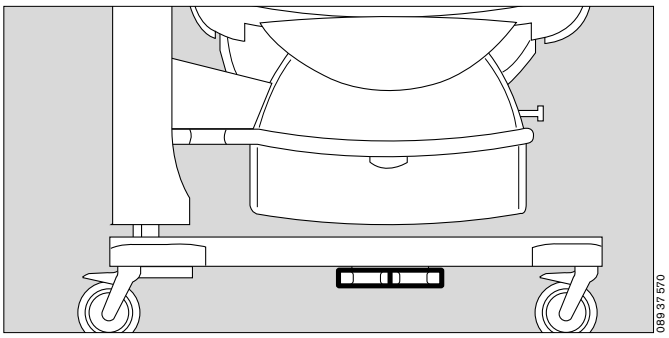

Check the power failure alarm

- Disconnect the unit from the mains.

3 The power failure LED must flash.

An intermittent tone must start. The volume of this tone must remain constant for at least 30 seconds.

If the volume decreases too soon:
- Leave the incubator connected to the mains and switched on for 24 hours to recharge the NiCd battery.
- Repeat the test.

If the volume again decreases too soon:
- Call DrägerService.

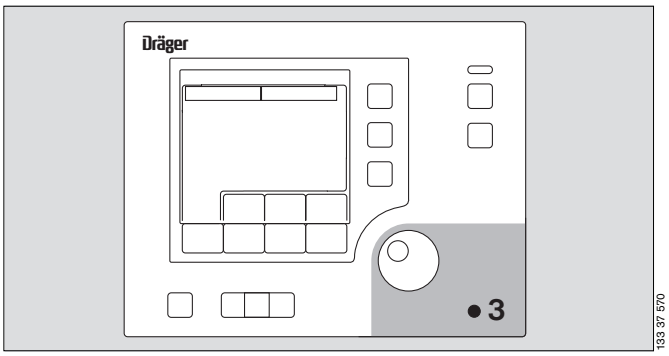

* optional equipment feature

Check the fresh air filter

⚠ **Use the original Caleo® air filter (MX 17 015) only! Risk of fire!**

- Tilt the unit to remove the fresh air filter more easily (see page 23).

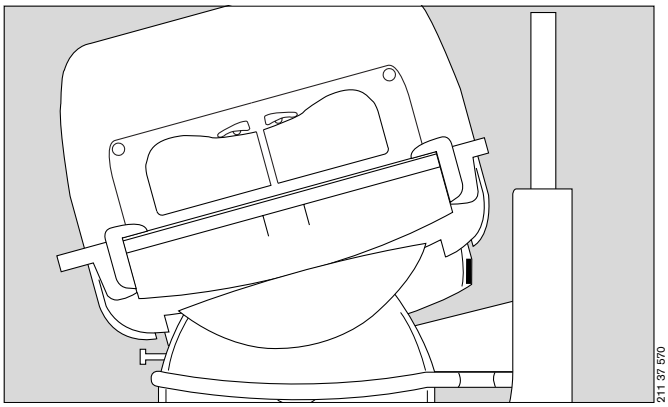

1 Pull the holder for the fresh air filter downwards and remove.

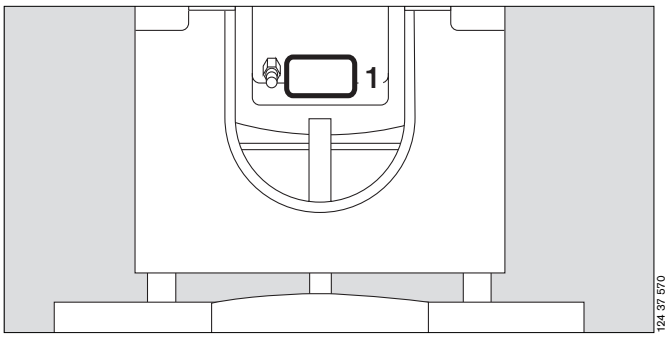

2 Check that the seal on the filter box is in place.

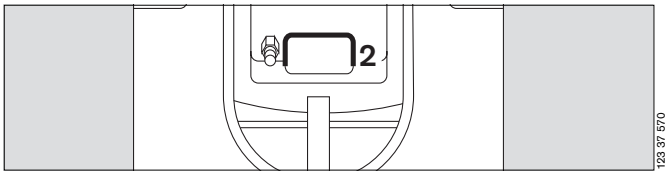

Fitting the filter

3 Separate the filter holder and
4 filter frame at the snap-in fastening.
5 Insert the filter.
- Close the filter holder and filter frame.
- Mark the next due date for replacement of the new filter (2 months after installation) on the label and
6 Stick the label to the filter holder.

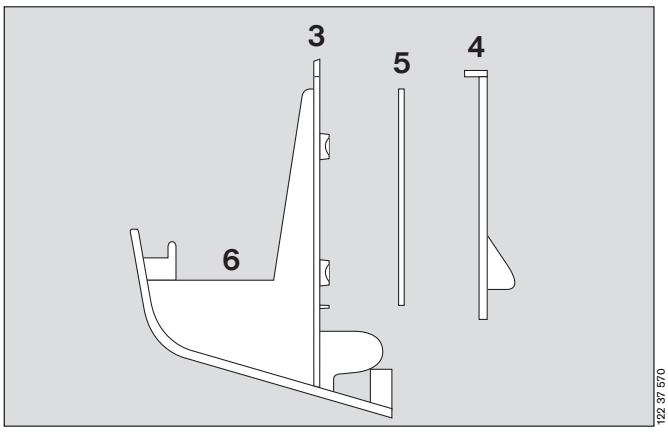

If a filter is already installed:
- Check the condition of the filter.
- Check the due date for replacement. The label is on the filter holder.

If the filter is fouled, damaged or moist, or if the due date for replacement has been reached:
- Discard the old filter.
- Fit a new filter.

Before operating the unit with skin temperature sensors, it is important that the sensors must be tested before they can be used on the unit (see "Using skin temperature control" on page 42).

The incubator is ready for operation when all checks have been carried out successfully.

Operation

Contents

Operation 34

Precautions 34
Switching on Caleo® 37
Using air temperature control 38
Alarms 41
Using skin temperature control 42
Changing over between air/skin temperature control 43
Using skin temperature control 45
Alarms 48
Using humidity control 50
Setting AUTO humidity 51
Manually adjusting the set value 51
Alarms 53
Using O2 control 54
Adjusting the set value 55
Alarms 57
Selecting menus 58
Kangaroo mode 58
Alarms 60
Trend display 62
Trend analysis 65
Trend selection 67
Cleaning mode 69
Configuration 71
Activating configuration mode 71
Language/date/time 72
Setting system parameters 73
Setting alarms 74
O2 sensor information 76
Viewing software information 76
Lock key pad functions 77
Alarm suppression 77
Weighing scale 78
Weighing without tare 80
Ending operation 81
Switch off incubator 81

Operation

Precautions

Before each use, check that the unit is ready for operation (see page 26).

Make sure that all hoses and cables are routed correctly and safely without obstruction! Otherwise: Risk of extubation! Danger of disconnection!

Lively patients must be observed with particular care.

When the canopy, front flap, hand ports are opened or when the bed has been pulled out or when the tubing grommets are removed, the patient must be observed constantly to make sure that he or she cannot fall out of the incubator.

Do not lean or apply weight on the bed when it has been pulled out. Maximum load 5 kg

Do not use the X-ray drawer as writing support or bed for the patient.

Allow time for the incubator to warm up before use (page 107).

Additional external heat sources, such as sunlight, heat lamps, spotlamps and electric cushions should be avoided! They cause the temperature inside the Caleo® to rise in an uncontrolled manner.

The baby's core temperature must be regularly monitored with an independent thermometer.

The conclusions to be drawn from the measured skin temperature are the responsibility of the attending physicians.

Skin temperature control mode must not be used on babies who are in shock or who have a high temperature!

Skin temperature control mode must not be used on twins, since the Caleo® controls only the temperature for one baby. Risk of hypothermia or overheating! For twins, the air temperature control mode must be used.

Make sure that you do not confuse the positions for the skin temperature sensors. Skin temperature control is regulated by the yellow skin temperature sensor (T1). If this sensor is stuck to the wrong part of the body, the patient may be excessively warmed!

Do not place any cloths over the hot air duct. The temperature control system would be disrupted, causing a risk of burning if the air from the hot air duct is channelled directly to the patient.

The castor with direction lock does not have a brake. When parking the unit, apply the brakes of all braked castors.

When treating larger babies, the higher heater output may cause the air temperature in the Caleo® incubator to rise. In this case the double wall should be removed.

The room temperature must be at least 3 °C lower than the air temperature in the Caleo® incubator.

When treating twins, pay attention to the risk of cross-infection!

Fire hazard from supply of O_2

- No naked lights or smoking. Textiles, oil and plastics can very easily catch fire and burn rapidly in an O_2 enriched atmosphere!
- All fittings and seals in contact with oxygen must be kept free of oil and grease!
- Open valves on O_2 cylinders slowly!
- Do not use Caleo® in the presence of flammable anaesthetic gases or disinfecting agents. Risk of explosion!
- Do not use or keep flammable liquids, such as alcohol, ether or acetone, in Caleo®!
- Do not use any electrical equipment in the patient capsule, unless this equipment is expressly designed for use in explosion-hazard areas.
- Use the original Caleo® air filter (MX 17 015) only!

Note the physiological risks from O_2.

During O_2 therapy, monitor the O_2 concentration with a separate O_2 monitor.

The air in the incubator may only be enriched with O_2 when prescribed by a doctor.
O_2 enrichment must be controlled on the basis of the arterially measured oxygen partial pressure in the patient's blood. Otherwise, there is a danger of hyperoxaemia (damage to the eyes) or hypoxaemia (brain damage).

Medicaments and similar substances must not be atomised in the patient capsule. Correct functioning of the incubator may be impaired by the precipitation of atomised substances.

Do not cover the sensor unit and do not hang anything from the slits in the sensor unit. Keep the slits of the sensor unit free of impurities.

In the event of a power failure, the CO_2 level in the patient capsule may rise due to an insufficient supply of fresh air. Pay attention to the risk of CO_2 poisoning!

The central alarm light can be deactivated (see page 124). Always check the alarm LEDs on the control panel and the associated alarm beep signals.

Front flaps
When closing the front flaps, make sure that the patient is not lying in the closing path.
The front flaps are not properly shut until the red latches are no longer visible.
When opening and closing the front flaps, make sure that the hoses and cables are not caught in the moving double wall!

Side flaps
When opening and closing the side flaps, make sure that the hoses and cables are routed safely and clear of any obstructions!
The side flaps are not properly shut until the red latches are no longer visible.

Canopy
The canopy must not be used as a shelf for laying clothing, instruments etc.
Before moving the canopy, make sure that nothing has been laid on top of it.
When fitting and removing the canopy cover hold it firmly in your hand.
The canopy installation catch must engage correctly.
Do not lift the canopy when engaged.
Do not tilt the canopy forwards.
When closed, make sure that the canopy cover sits firmly in place!

Double wall
To fit and remove the double wall, remove the canopy from Caleo®.

Tilting/height adjustment
Ensure that the cables and hoses are routed correctly and safely without obstruction. Hoses and/or cables risk being trapped when tilting the Caleo® and when opening and closing the front flap.

Control unit
Do not mechanically load the cable by e.g. hanging appliances from it.
If the control unit is mounted on the handle side, never remove the cable from the cable guides on the basic pole.
Do not place any liquid containers above the control unit.

When fitting accessories, please note:
- The accessory equipment must not collide with the unit when adjusting the tilt angle and height of Caleo®.
- The accessory equipment on the handle side must not move with the main unit during height adjustment of Caleo® (page 109).

Observe the maximum loads.
Danger of overturning the unit!

Kangaroo mode
The patient's core temperature must be monitored constantly, because it is outside the controlled climate.
Particular attention must be paid to critical patients vital parameters.

When using Phototherapy
Absorption of light through the baby's skin will supply heat, which may increase the baby's core temperature.

For this reason:
– Roughly 15 minutes before starting phototherapy, decrease the air temperature setting for the incubator air by about 2 °C.
– Decrease the set value for humidity.
– Room temperature must be at least 3 °C lower than the air temperature in Caleo®.
  This value applies to Dräger Type 4000 phototherapy units. When using other phototherapy units, especially units without a built-in fan, the temperature in the Caleo® incubator may rise even more sharply.
– Phototherapy may only be used with a stand!

The core temperature of the baby must be monitored with particular care during phototherapy!

The supply of fluid to the baby must be increased, e.g. by parentral infusion, **to compensate for the increased loss of water during phototherapy.**

The phototherapy lamp and Caleo® canopy must not be covered with cloths, aluminium foil or other materials in order to boost the phototherapeutic effect – risk of heat build-up, as the incubator cannot be adequately cooled with ambient air.
Danger of overheating the patient.

In-house transport
An even floor surface must be ensured when moving the Caleo® incubator. The incubator must not be used outside the hospital building, as the castors may be damaged or dislodged.

The Caleo® may only be moved when **empty**.

High noise levels
Excessive noise levels that can disturb the patient may be caused by:

- using O_2 head boxes and delivering pressurised gases,
- wear on the bearings of the fan motor,
- placing objects on the canopy.
- Observe the specified maintenance intervals – see page 95.

Cleaning mode may only be used when Caleo® is **empty**.
After use, allow Caleo® to cool down before dismantling.
Risk of burning when touching the heater!

Electrical safety

Do not use multiway adapters to connect the power supply of the Caleo®!
The patient leakage current may rise above the permitted limits if the protective earth conductor fails while equipment is connected to the socket strip. In such cases, the risk of electric shock cannot be excluded.

Only use electromedical ancillary equipment conforming to IEC / EN 60601-1.

When using the integrated socket strip: take into account the total leakage current and total current consumption!
See "Technical Data" on page 106.

Caleo® does not monitor the power supply to external devices.

Mobile telephones must not be used within 10 metres of the incubator.
Mobile telephones can interfere with the functioning of electromedical equipment and therefore endanger the patient!*

* Dräger medical equipment conforms to the interference immunity requirements laid down in product-specific standards or in EN 60601-1-2 (IEC 60601-1-2). However, depending on the design of mobile phone and the application situation, field strengths exceeding the values laid down in the specified standards may be generated in the immediate vicinity of mobile phones, thereby causing interference and malfunctions.

Switching on Caleo®

- Connect the unit to the mains.

1 Switch on the unit = press the on/off switch until it clicks into place.

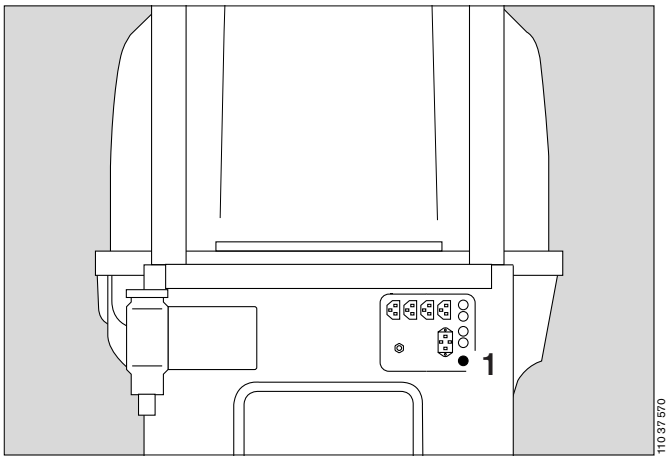

An audible signal is emitted.

– The opening screen is displayed.

The incubator performs a self-test.
During the self-test, the functions of the machine are checked. The audible signal and screen displays must be checked by the user, see page 29.

– After the self-test, the standard screen for air temperature control is displayed.

– The currently activated function is always highlighted by a light background.

With air temperature control, the unit takes 20 minutes to warm up. During this period the alarm for "Air temp. deviation above 1.5 °C" is suppressed.

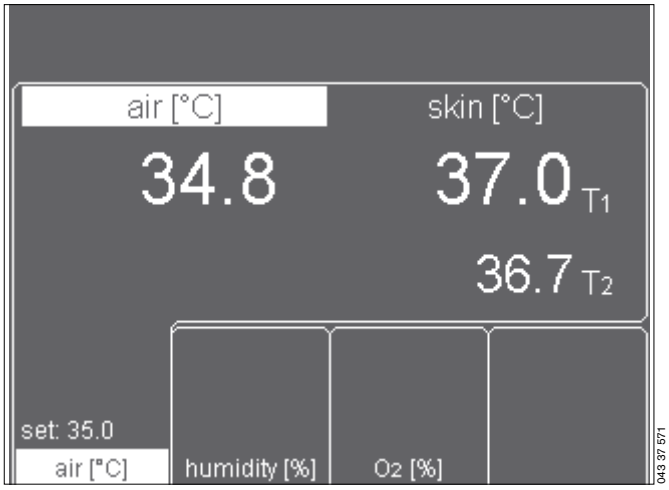

Using air temperature control

- **The baby's core temperature must be measured regularly with an independent thermometer!**

Do not leave the canopy open for any length of time, otherwise the air temperature in the Caleo® will drop.

Adjusting the set value for air temperature

Standard set value range	28 °C to 37 °C
Extended set value range	37.1 °C to 39 °C
	20 °C to 27.9 °C
Default setting	33 °C

1 Adjust the set value = press the button.

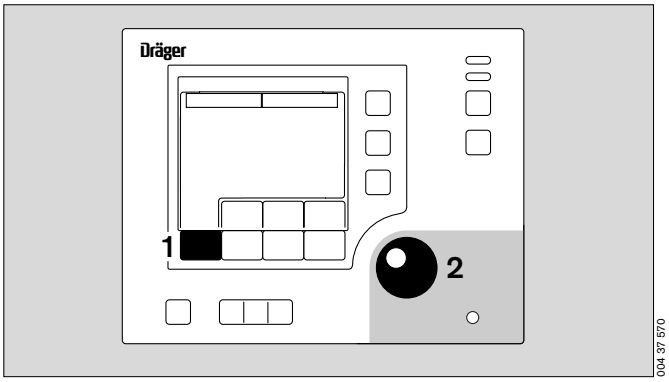

– The current actual measured value and the desired set value are displayed on the screen both as bar graphs and as numerical values.

– The message »set value with rotary knob« appears at the top of the screen.

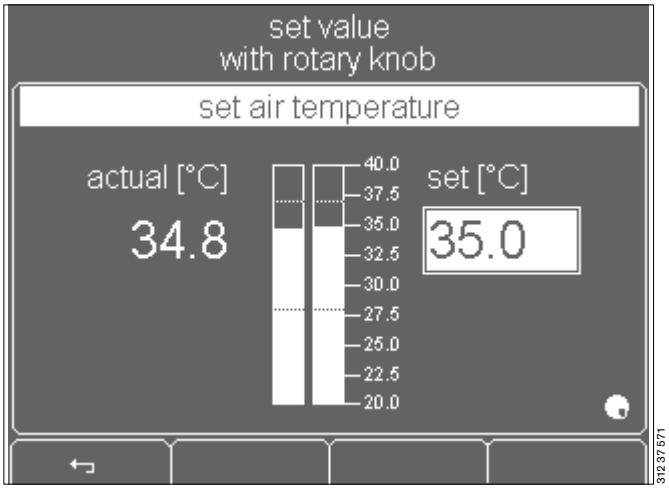

2 Increase the set value = turn the rotary knob clockwise.
2 Decrease the set value = turn the rotary knob counter-clockwise.
2 Confirm the new setting = press the rotary knob.

If you do not wish to change the settings:
↩ press = the new settings are cancelled
The display returns to the standard screen. The previous set value is retained.
Or
– Wait for 7 seconds: Caleo® emits 4 short beeps to prompt the user to press the rotary knob. If the rotary knob is not pressed, the display automatically returns to the standard screen after 7 seconds, and the previous set value is retained.

⚠ When using the extended set value range, the baby's core temperature must be continuously monitored.

If the specified set value exceeds the standard set value range

– The following message is displayed at the top of the screen »confirm extended range with rotary knob«.

- Confirm the extended range = press the rotary knob.
- Continue increasing the set value = turn the rotary knob clockwise.

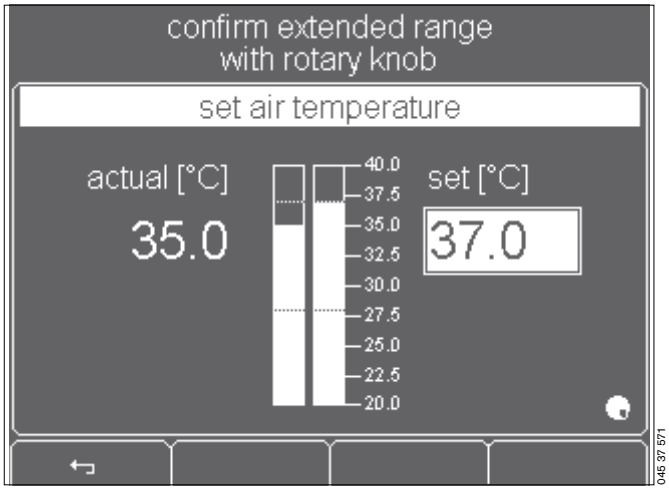

– The advisory message »⚠ >37.0 °C« appears on the screen.

– The following message appears at the top of the screen: »set value with rotary knob«.

- Confirm the set value = press the rotary knob.

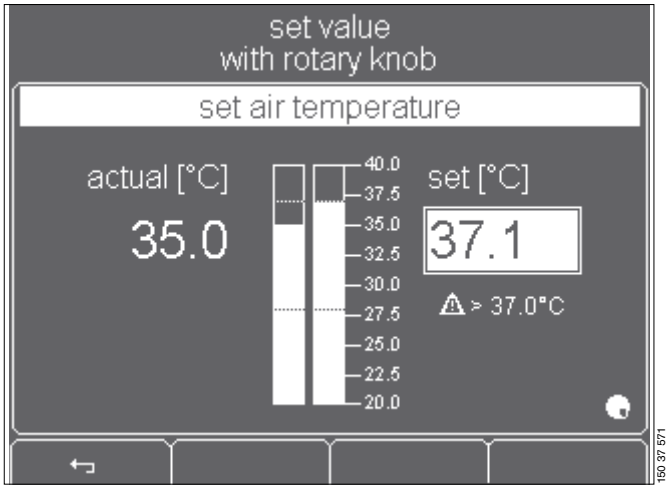

If the specified set value is below the standard range

– The following message is displayed at the top of the screen: »confirm extended range with rotary knob«.

- Confirm the extended range = press the rotary knob.
- Continue decreasing the set value = turn the rotary knob counter-clockwise.

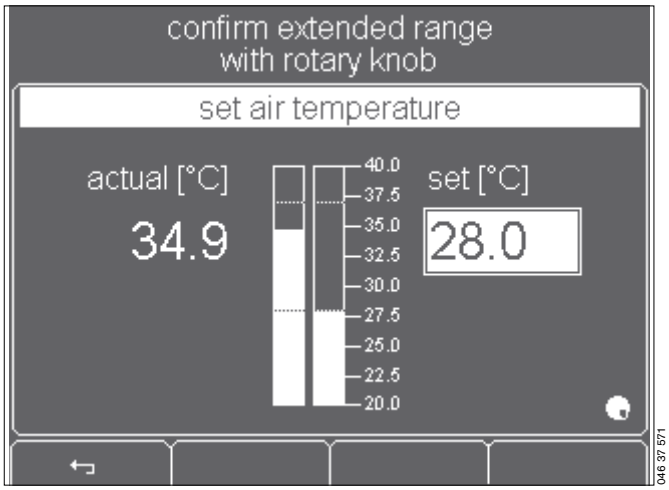

– The advisory message »⚠ <28.0 °C« appears on the screen.
– The following message appears at the top of the screen »set value with rotary knob«.

● Confirm the set value = press the rotary knob.

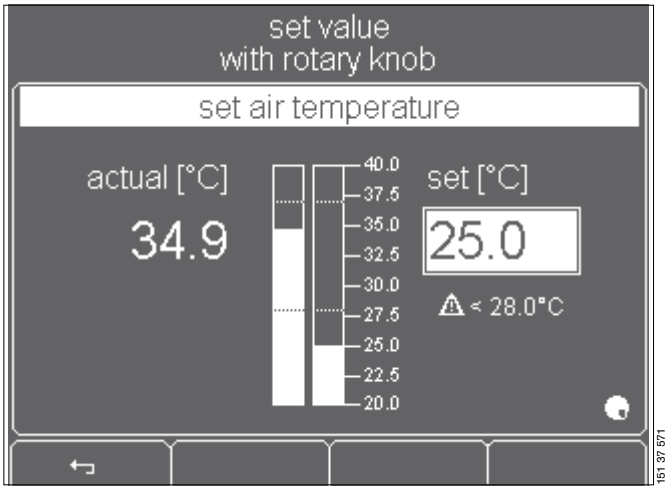

– The display returns to the standard screen. The measured values are displayed.

– The set value and»set: <28.0 ⚠« are displayed alternately.

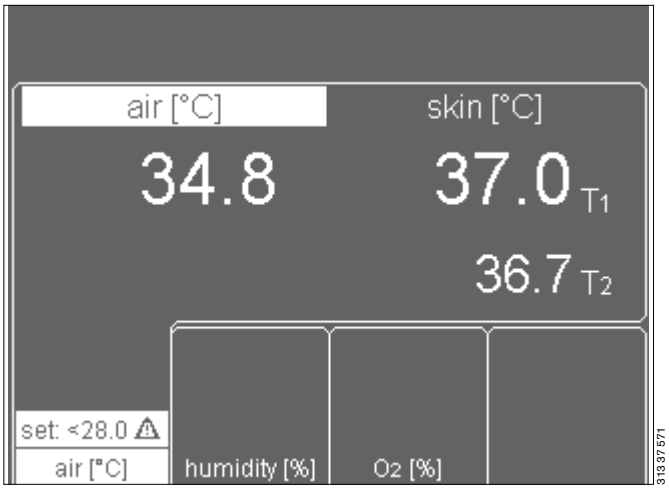

Reducing the air temperature in Caleo®
The cooling rate depends on the incubator design and can be increased by:
– removing the double wall
– reducing the outside temperature (if possible)
– reducing the set humidity value.
The cooling rate is not accelerated by:
reducing the air temperature setting below the actually desired value.

In **urgent** cases: open the canopy, front flap or hand ports.
In this case, the baby must be monitored constantly to ensure that he or she cannot fall out of the incubator.

If you do not wish to confirm the new set value:
1 Cancel adjustment of the set value = press button.
The screen returns to the standard display mode. The previous set value is retained.
Or
– Wait for 7 seconds: Caleo® emits 4 short beeps to prompt the user to press the rotary knob. If the rotary knob is not pressed, the display automatically returns to the standard screen after 7 seconds, and the previous set value is retained.

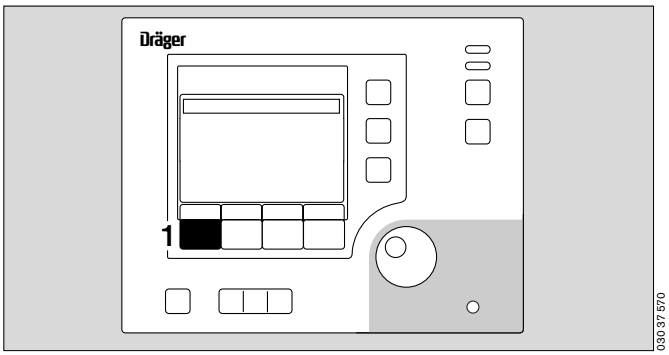

Alarms

Alarm limits can be changed in the configuration (see page 71).

Example: if the deviation between the set and measured air temperature exceeds *1.5 °C*[*]:
– The screen displays the warning message »**Air temp. deviation above** *1.5 °C* «,
– The alarm tone sequence (3 beeps) is sounded,
1 The central alarm indicator lights up[**],
2 The measured value flashes,
3 The yellow alarm LED flashes.

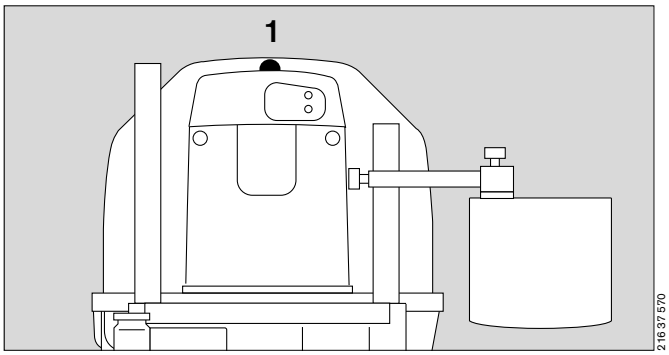

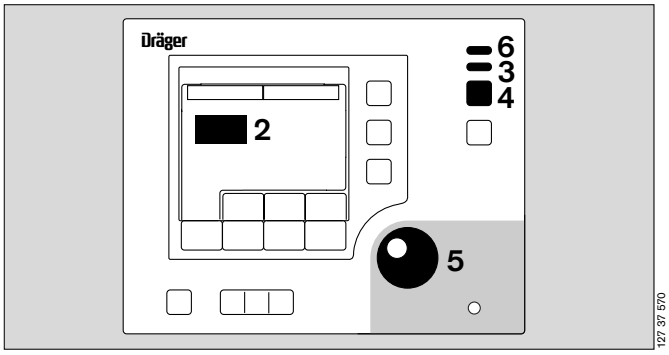

The intermittent alarm tone sequence can be muted for 15 minutes.
4 Suppress intermittent alarm tone = press button
or
5 Press the rotary knob.
– The warning message remains on the screen,
– The intermittent alarm tone is muted,
1 The central alarm indicator goes out,
2 The measured value continues to flash,
3 The yellow alarm LED continues to flash.

When the measured value returns within the range ±*1.5 °C*:
– The warning message disappears,
– The intermittent alarm tone is muted,
1 The central alarm indicator goes out,
2 The measured value remains on-screen but does not flash,
3 The yellow alarm LED goes out.

If the air temperature is over 38 *°C* (or over *40 °C* in the case of the extended set value range):
– The screen displays the warning message: **»Air temperature too high«**,
– The intermittent alarm tone sequence (5 beeps) is sounded,
1 The central alarm light is lit**,
2 The measured value flashes,
6 The red alarm LED flashes.

The alarm tone can be muted for 5 minutes.
Caleo® heats up if necessary to attain the desired interior air temperature setting.
2 The measured value continues to flash,
6 The red alarm LED continues to flash.

When the air temperature again drops below the alarm value:
4 Press the button to cancel the alarm.

For other alarms, see "Troubleshooting – Error Messages" on page 98. See "Alarm description" on page 123.

---

* The *numerical values* in this description are examples. See "Setting alarms" on page 74.
** The central alarm light can be switched off. See "Setting system parameters" on page 73.

Using skin temperature control

Immediately before using the yellow skin temperature sensor or the white peripheral sensor, insert it in the yellow or white socket and wait for the measurement signal to appear on screen.

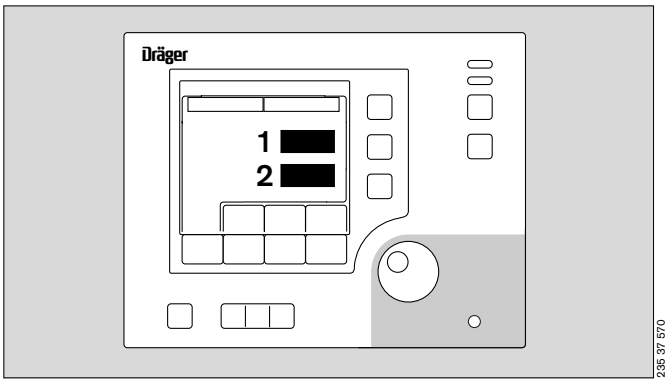

1 Measurement signal from the yellow skin temperature sensor (T1)
2 Measurement signal from the white peripheral temperature sensor (T2)

If no measurement signal appears, the sensor must be replaced (page 101).

Using skin temperature measurement in air temperature control mode or skin temperature control mode.

Connect the temperature sensors for measuring the skin temperature and peripheral temperature:

- Plug the yellow skin temperature connector into the yellow socket on the sensor unit (skin temperature, T1). When using skin temperature control, the control functions refer to this sensor.
- Plug the connector of the white peripheral temperature sensor into the white socket on the sensor unit (peripheral temperature, or skin temperature of the twin in the case of air temperature control mode, T2).
- Route the sensor cable through one of the flexible tubing grommets.
- Remove the protective foil from the adhesive pad and place the skin temperature sensor on the pad.
- Using the adhesive pad, attach the sensor tip to the appropriate part of the baby's skin.

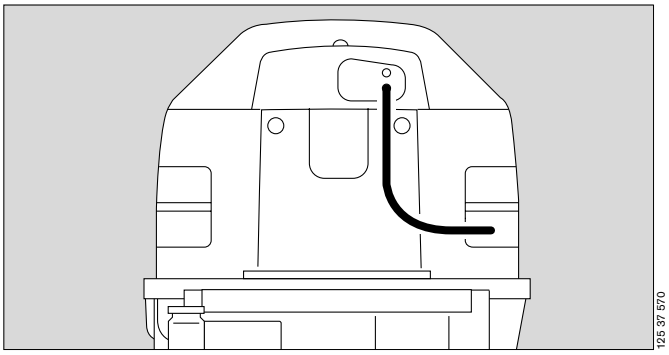

Positioning the skin temperature sensor (yellow):
If the baby is lying on his/her back:

- Attach the yellow sensor to the abdomen, near the liver.

If the baby is lying on his/her belly:

- Attach the yellow sensor to the back, preferably near the kidneys.

Positioning the peripheral temperature sensor (white):

- Attach the white sensor to the extremities, preferably the foot or arm.

Do **not** use the skin temperature sensor (yellow) or peripheral temperature sensor (white) to measure rectal temperature!

Regularly check that the skin temperature sensor is correctly attached to the patient's skin. If the skin temperature sensor has fallen off, it will measure the air temperature, resulting in possible overheating of the patient (although the air temperature would not rise above 39 °C).

When a skin temperature sensor is attached but "air temperature control" is activated, the measured skin temperature is displayed.
However, in this case, the temperature is not controlled as a function of skin temperature!

Changing over between air/skin temperature control

Do not use skin temperature control mode on babies in shock, as their skin temperature is much lower than normal. Skin temperature control would increase the air temperature by too much and would endanger the patient. Use air temperature control – see page 38.

Do not use skin temperature control mode on babies with a high temperature, as their skin temperature is much higher than normal. The control function would overcool the incubator, resulting in the risk of hypothermia.

Do not use skin temperature control mode on twins, because Caleo® only controls the temperature for one baby. Danger of hypothermia or overheating!

1 Change temperature control mode = press button.
1 The LED for the control mode requiring confirmation flashes.

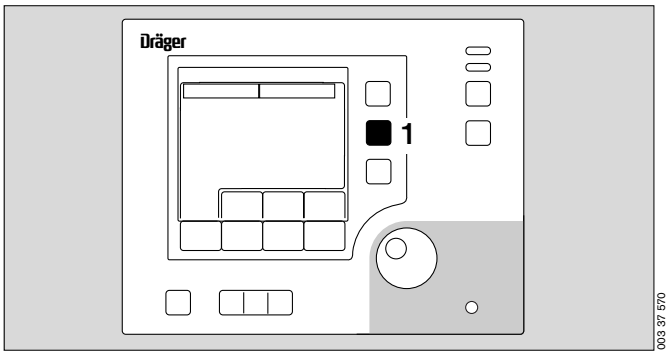

– The activated control mode is displayed on the screen. The actual and set values are displayed as bar graphs and numeric values.

– The upper part of the screen displays the message: »set value with rotary knob«.

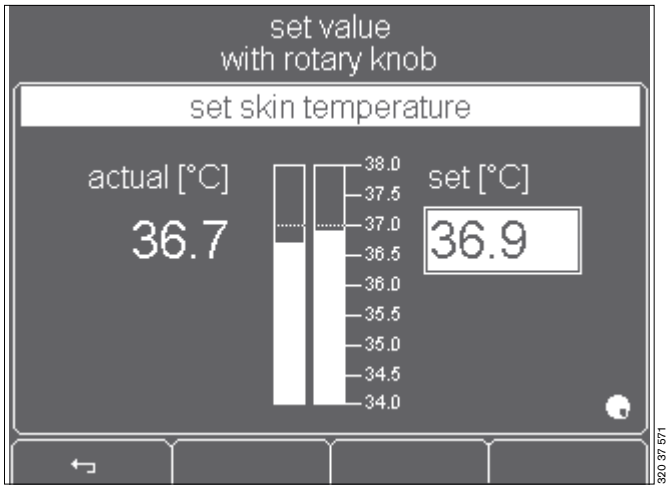

After the new mode has been activated, you can set the desired value with the rotary knob.

1 The LED of the activated mode flashes.
2 Adjust the set value = turn the rotary knob.
2 Confirm the new set value = press the rotary knob.

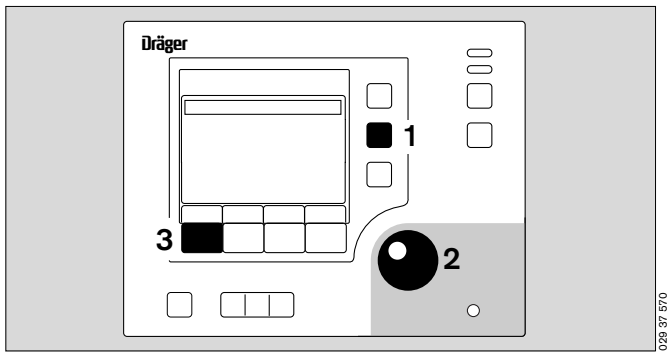

— The upper part of the screen displays the advisory message »confirm new mode with rotary knob«.

2 Confirm the new mode = press the rotary knob.

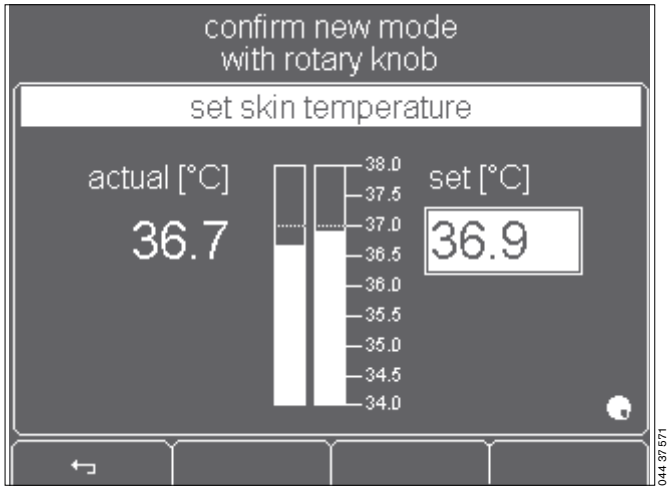

— The display returns to the standard screen.

1 The LED of the activated mode is lit.

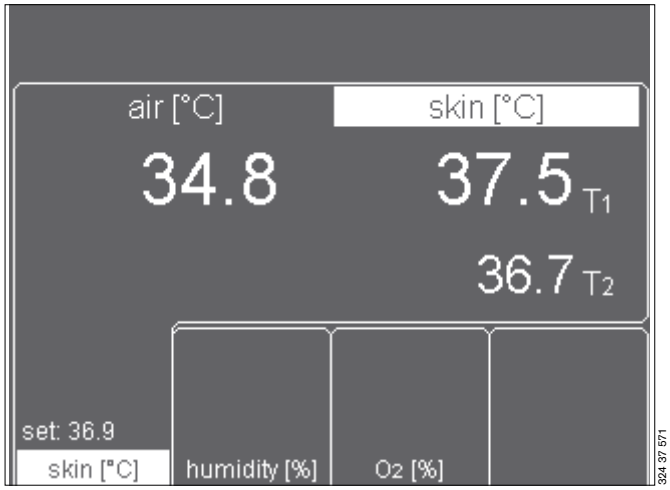

If you do not wish to change the settings:
3 ↵ press = the new settings are cancelled.
The display returns to the standard screen. The previous set value is retained.
Or
— Wait for 7 seconds: Caleo® emits 4 short beeps to prompt the user to press the rotary knob. If the rotary knob is not pressed, the display automatically returns to the standard screen after 7 seconds, and the previous set value is retained.

Using skin temperature control

Do not use skin temperature control mode on babies in shock, as their skin temperature is much lower than normal. Skin temperature control would increase the air temperature by too much and would endanger the patient. Use air temperature control mode – see page 38.

Do not use skin temperature control mode on babies with a high temperature, as their skin temperature is much higher than normal. The control function would overcool the incubator, resulting in the risk of hypothermia.

Do not use skin temperature control mode on twins, because Caleo® only controls the temperature for one baby. Danger of hypothermia or overheating!

Make sure that you do not confuse the positions for the skin temperature sensors. Skin temperature control is regulated by the yellow skin temperature sensor (T1). If this sensor is stuck to the wrong part of the body, the patient may be excessively warmed.

Do **not** attach the sensor under the baby, because otherwise the core temperature, not the skin temperature, will be measured and used as control parameter!

- **The baby's core temperature must be measured regularly with an independent thermometer!**

Do not leave the canopy open for any length of time, because the air temperature in Caleo® will drop!

Adjusting the set value

Standard set value range	34 °C to 37 °C
Extended set value range	37.1 °C to 38 °C
Default setting	36.5 °C

1 Adjust the set value = press the button.

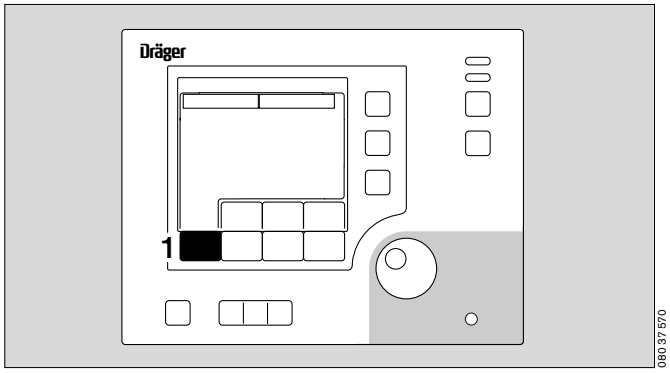

– The actual measured value and the set value are displayed on the screen both as bar graphs and as numerical values.
– The following message is displayed in the top part of the screen »set value with rotary knob«.

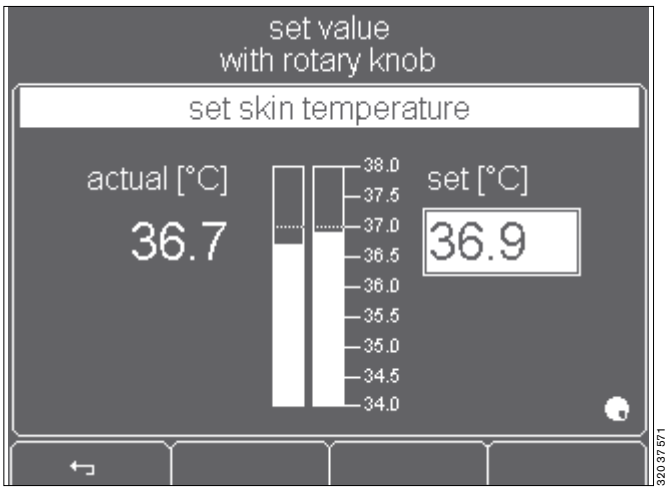

1 Increase the set value = turn the rotary knob clockwise.
1 Decrease the set value = turn the rotary knob counter-clockwise.
1 Confirm the new setting = press the rotary knob.

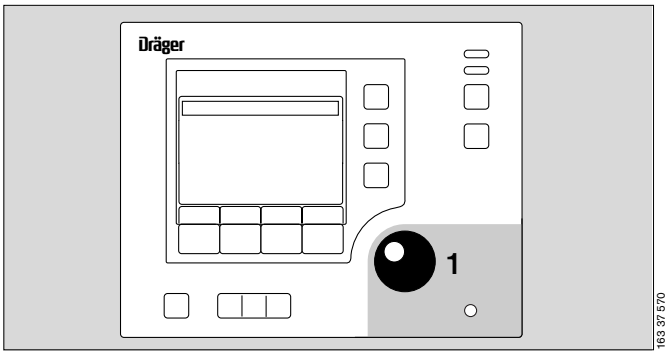

If you do not wish to change the settings:
↩ press = the new settings are cancelled.
The display returns to the standard screen. The previous set value is retained.
Or
– Wait for 7 seconds: Caleo® emits 4 short beeps to prompt the user to press the rotary knob. If the rotary knob is not pressed, the display automatically returns to the standard screen after 7 seconds, and the previous set value is retained.

⚠ **When using the extended set value range, particular care must be taken to monitor the baby's core temperature!**

If the specified set value exceeds the standard set value range,
– The following message is displayed »confirm extended range with rotary knob«.

1 Confirm the extended range = press the rotary knob.
1 Continue increasing the set value = turn the rotary knob clockwise.

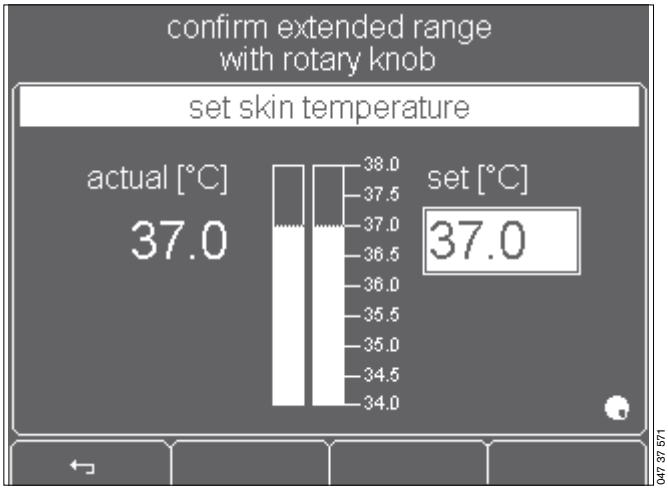

– The advisory message »⚠ >37.0 °C« appears on the screen.
– The following message appears at the top of the screen: »set value with rotary knob«.

● Confirm the set value = press the rotary knob.

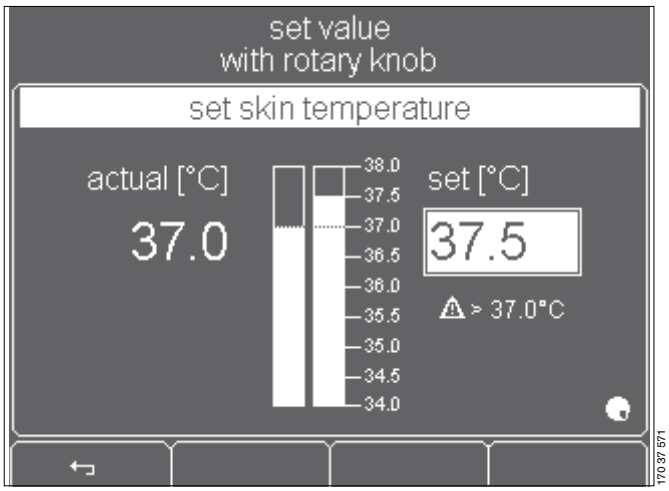

– The display returns to the standard screen. The measured values are displayed.

– The set value and »set: >37.0 ⚠« are displayed alternately.

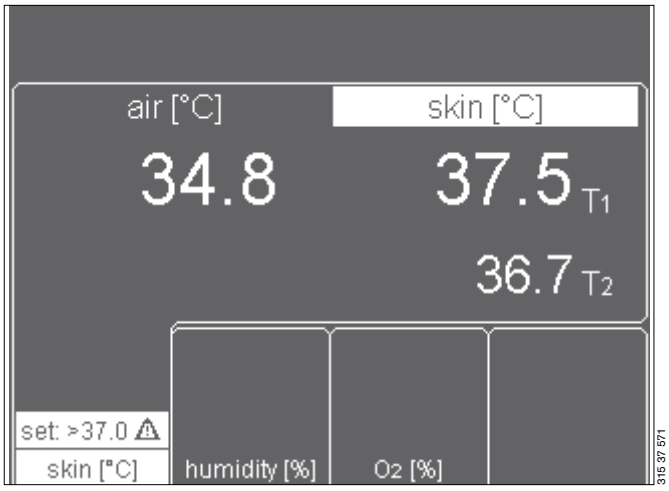

If you do not wish to confirm the set value:
● Cancel adjustment of the set value = press button.
The screen returns to standard display mode. The previous set value is retained.
Or
– Wait for 7 seconds: Caleo® emits 4 short beeps to prompt the user to press the rotary knob. If the rotary knob is not pressed, the display automatically returns to the standard screen after 7 seconds, and the previous set value is retained.

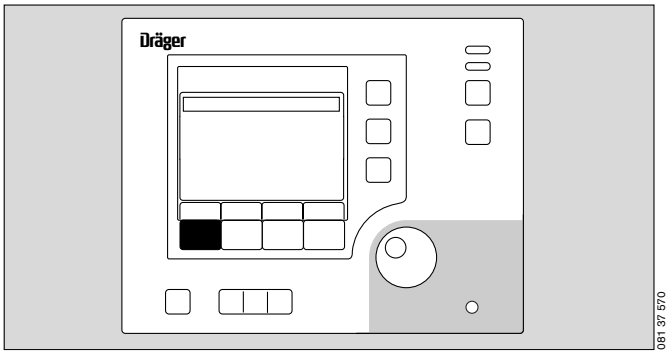

Alarms

Alarm limits can be changed in the configuration (page 74).

Example: if the deviation between the set and measured skin temperature exceeds ±*0.5 °C*[*]:
– The screen displays the warning message »**Skin 1 temp. deviation above** *0.5 °C* **«**,
– The alarm tone sequence (3 beeps) is sounded,
1 The central alarm indicator lights up[**],
2 The measured value flashes,
3 The yellow alarm LED flashes.

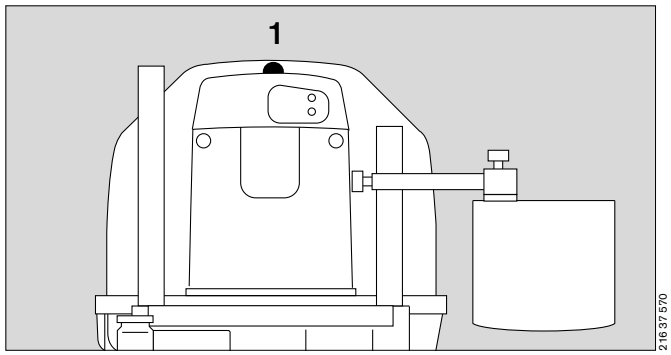

The intermittent alarm tone sequence can be muted for 5 minutes:
4 Suppress intermittent alarm tone = press button,
or
5 Press the rotary knob.
– The warning message remains on the screen,
– The intermittent alarm tone is muted,
1 The central alarm indicator light goes out,
2 The measured value continues to flash,
3 The yellow alarm LED continues to flash.

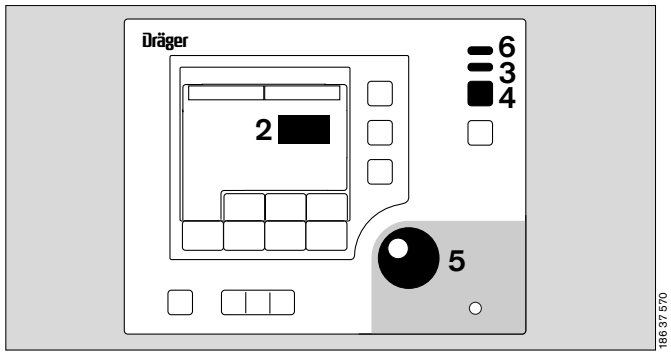

When the measured value returns within the range ±*0.5 °C*:
– The warning message disappears,
– The intermittent alarm tone is muted,
1 The central alarm indicator light goes out,
2 The measured value remains on-screen but does not flash,
3 The yellow alarm LED goes out.

If the sensor plug is disconnected:
– Instead of the measured value, 3 dashes are displayed.
After 3 seconds:
– The screen displays the warning message **»Connect skin 1 sensor«**.
– The intermittent alarm tone sequence (5 beeps) is sounded,
1 The central alarm indicator lights up**,
2 The measured value flashes,
6 The red alarm LED flashes.
Then:
● Immediately plug in the sensor

If the sensor is defective:
– The screen displays the warning message **»Skin 1 sensor fault«**.
– The intermittent alarm tone sequence (5 beeps) is sounded,
1 The central alarm indicator lights up**,
2 The measured value flashes,
6 The red alarm LED flashes.
Then:
● Change the skin temperature sensor.

As long as 3 dashes appear on screen, Caleo® does not heat. Danger of hypothermia for the patient!

---

* The *numerical values* in this description are examples. See "Setting alarms" on page 74.
** The central alarm light can be switched off. See "Setting system parameters" on page 73.

The alarm tone can be muted for 5 minutes:

1 Suppress intermittent alarm tone = press button

or

2 Press the rotary knob.

– The warning message remains on the screen,
– The intermittent alarm tone is muted,
– The central alarm indicator light goes out,

3 The measured value continues to flash,

4 The red alarm LED continues to flash.

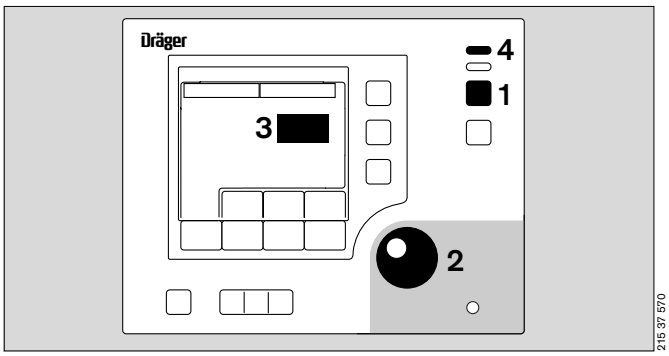

For other alarms, see "Troubleshooting – Error Messages" on page 98.
See "Alarm description" on page 123.

Using humidity control*

- Connect the humidifier system
  (see "Using humidifier systems" on page 24).

1 Set humidity control = press button.

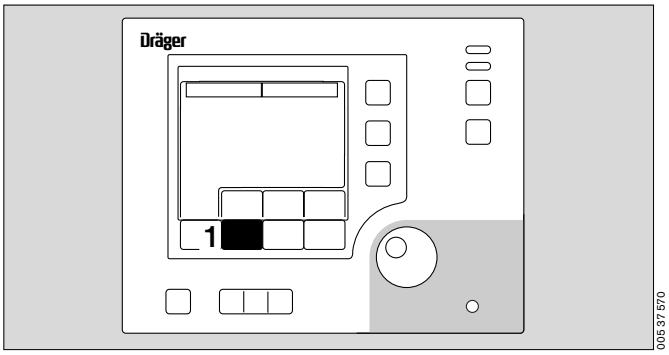

– The actual value and current setpoint of the humidity control are displayed as bar graphs and numerical values.

Soft key assignments:

2 ↩ = Do not activate new settings.

3 off = Switch off humidity control.

4 manual = Activate manual humidity control mode.

5 auto = Activate automatic humidity control mode (see page 121).

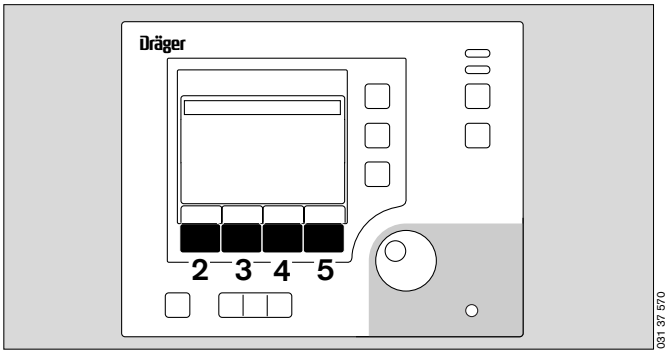

– On activating the humidity control, AUTO humidity is proposed as default.

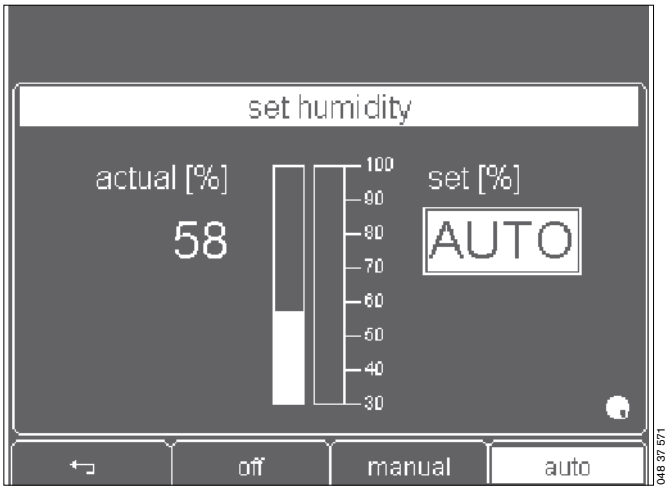

* optional equipment feature

Setting AUTO humidity

In AUTO humidity, the humidity setpoint is automatically calculated and set by the system as a function of the air temperature setting (siehe page 121).
The maximum relative humidity depends on the ambient temperature and incubator air temperature at max. 75 % relative humidity.

1 Switch humidity control over to AUTO humidity = press button (soft key).
2 Activate AUTO humidity = press the rotary knob.

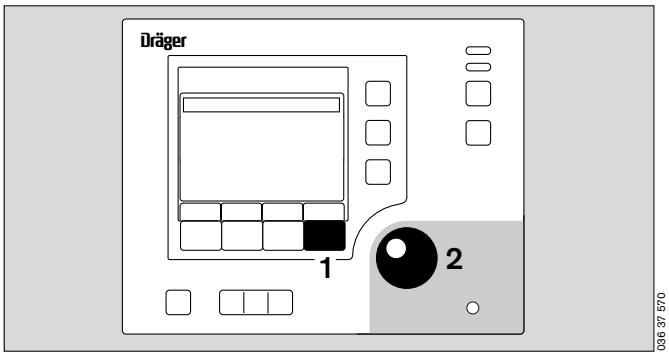

– The display returns to the standard screen. The measured value and the automatic set value are displayed.

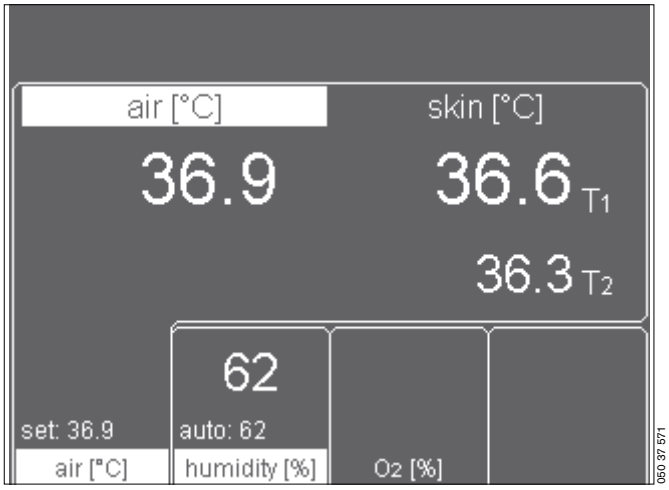

Manually adjusting the set value

Standard set value range	30 % to 99 %
Default value	50 %

3 Switch humidity control over to manual mode = press button (soft key).
4 Increase set value = turn rotary knob clockwise.
4 Decrease set value = turn rotary knob counter-clockwise.
4 Confirm set value = press rotary knob.

The maximum relative humidity attained is between 85 % and 99 % r.h., depending on the ambient temperature and the incubator air temperature.

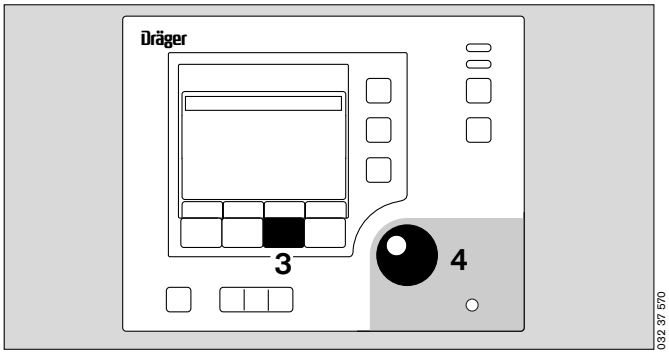

– The actual value and the current set value of the humidity control are displayed as bar graphs and numerical values.

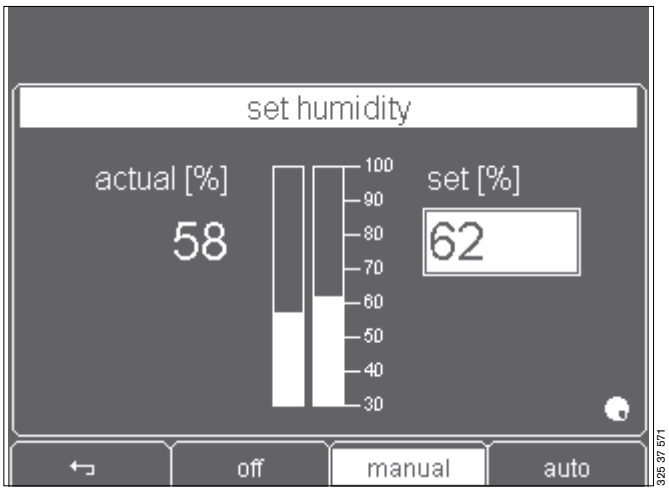

– The display returns to the standard screen. The measured values and set values are displayed.

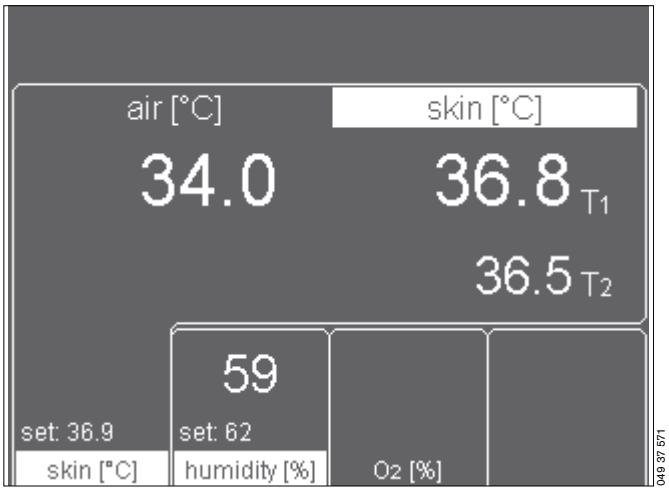

Alarms

In the event of water shortage

– The following warning message appears on the screen **»Water empty, please refill«**,
– The alarm tone sequence (3 beeps) is sounded,
– The central alarm indicator lights up*,
1 The measured value flashes,
2 The yellow alarm LED flashes.

Fill the water container or replace the water bag – see page 24 and the following pages.

The intermittent alarm tone sequence can be muted for 15 minutes:
3 Suppress intermittent alarm tone = press button,
or
4 Press the rotary knob.
– The warning message remains on the screen,
– The intermittent alarm tone is muted,
– The central alarm indicator light goes out,
1 The measured value continues to flash,
2 The yellow alarm LED continues to flash.

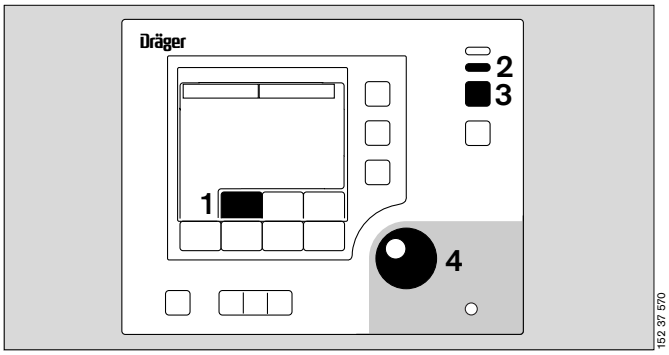

When the cause of the alarm has been remedied,
– The warning message disappears,
– The intermittent alarm tone is muted,
– The central alarm indicator light goes out,
1 The measured value remains on the screen but does not flash,
2 The yellow alarm LED goes out.

For other alarms, see "Troubleshooting – Error Messages" on page 98.
See "Alarm description" on page 123.

* The central alarm light can be switched off.
See "Setting system parameters" on page 73.

Using O_2 control*

Note the physiological risks from O_2!

The air in the incubator should only be enriched with O_2 when prescribed by a doctor.
O_2 enrichment must be controlled on the basis of the arterially measured oxygen partial pressure in the patient's blood. Otherwise, there is a danger of hyperoxaemia (damage to the eyes) or hypoxaemia (brain damage).

- Connect the probe of the O_2 hose to the outlet of the central medical gas pipeline supply (page 17).

1 Set O_2 control = press soft key button.

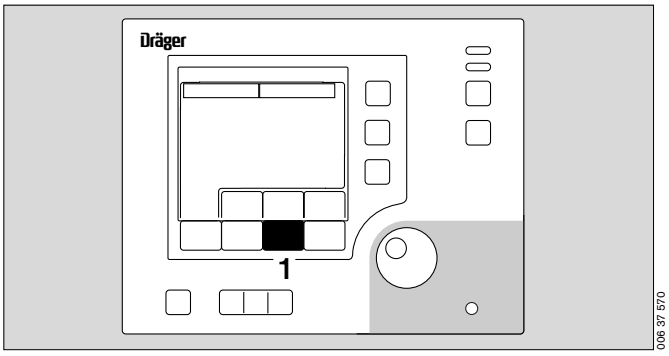

– The actual value and the current set value of the O_2 control are displayed as bar graphs and numerical values.

Soft key assignments:

2 ↩ = Do not activate new settings.

3 off = Switch off O_2 control.

4 on = Switch on O_2 control.

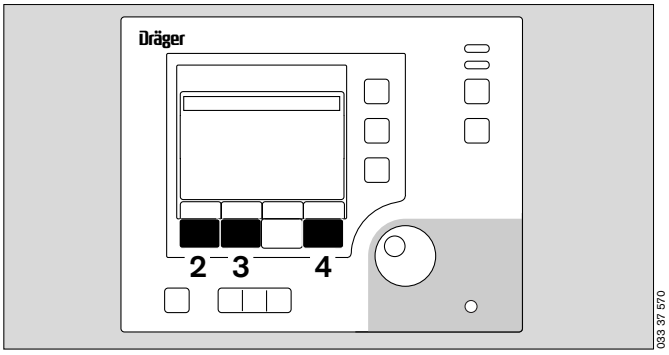

– After the system is switched on, the oxygen sensors need a warm-up phase before O_2 control is active.
– The following message is displayed at the top of the screen: »set value with rotary knob«.
– After the selected O_2 setting has been confirmed, automatic O_2 control is active.

The current measured value is displayed after a few seconds.

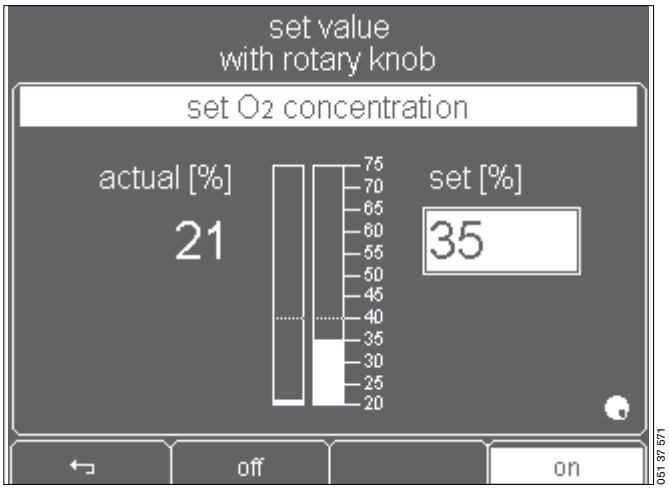

* optional equipment feature

Adjusting the set value

Standard set value range	21 Vol.% to 40 Vol.%
Extended set value range	40.1 Vol.% to 75 Vol.%
Default setting	21 %

1 Increase set value = turn rotary knob clockwise.
1 Decrease set value = turn rotary knob counter-clockwise.
1 Confirm set value = press rotary knob.

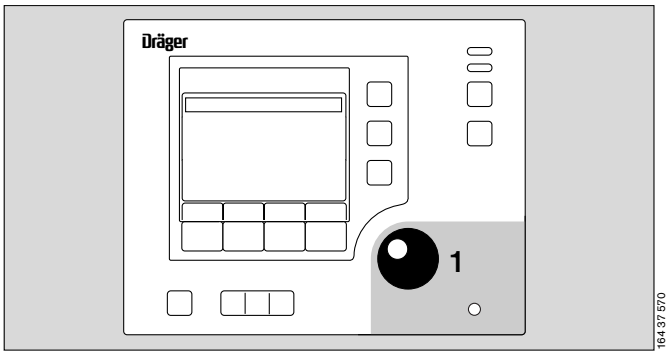

– The current actual measured value and the set value are displayed on the screen both as bar graphs and as numerical values.

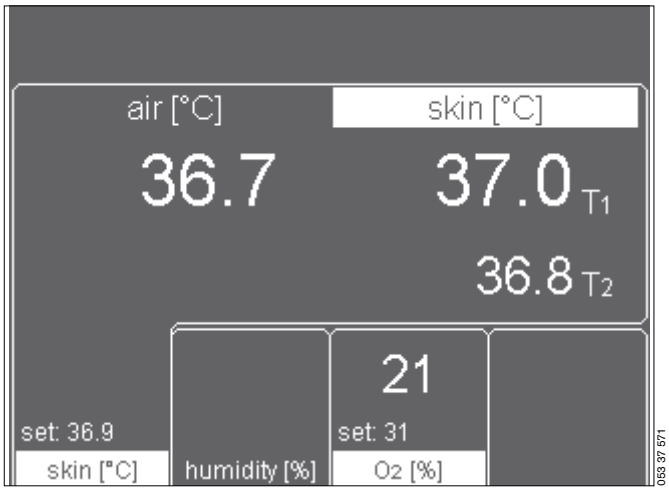

⚠ Note the dangers of high O2 concentrations (see page 34)!

If the set value exceeds the standard set value range

– The following message is displayed at the top of the screen: »confirm extended range with rotary knob«.

● Confirm the extended set value range = press the rotary knob.
● Continue increasing the set value = turn the rotary knob clockwise.

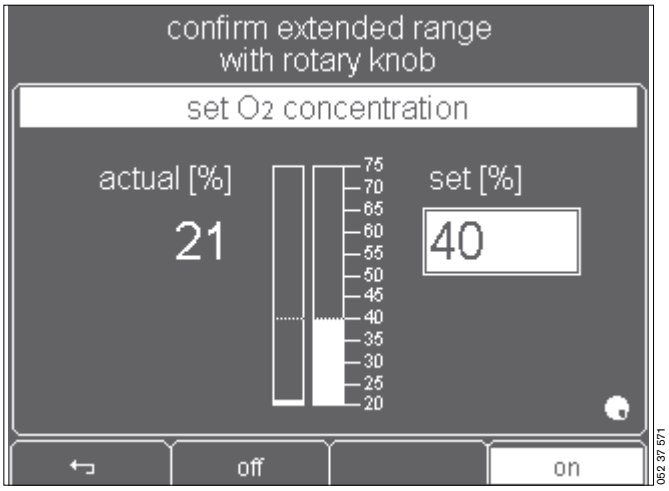

– The advisory message »⚠ >40 %« appears on the screen.
– The following message appears at the top of the screen »set value with rotary knob«.

● Confirm the set value = press the rotary knob.

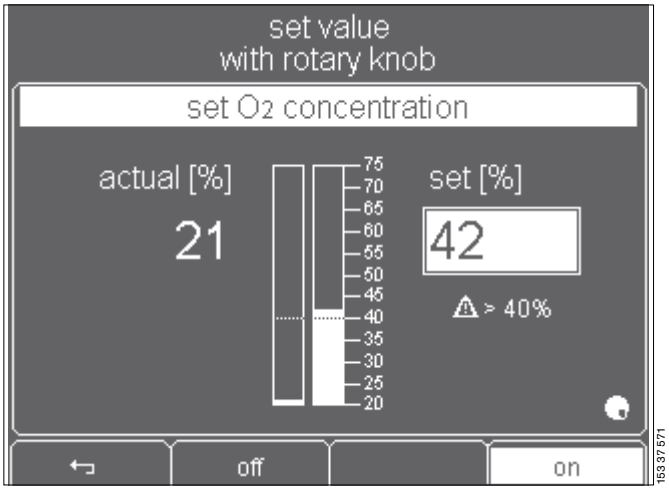

– The display returns to the standard screen. The measured values are displayed.

– The set value and »set: >40 ⚠« are displayed alternately.

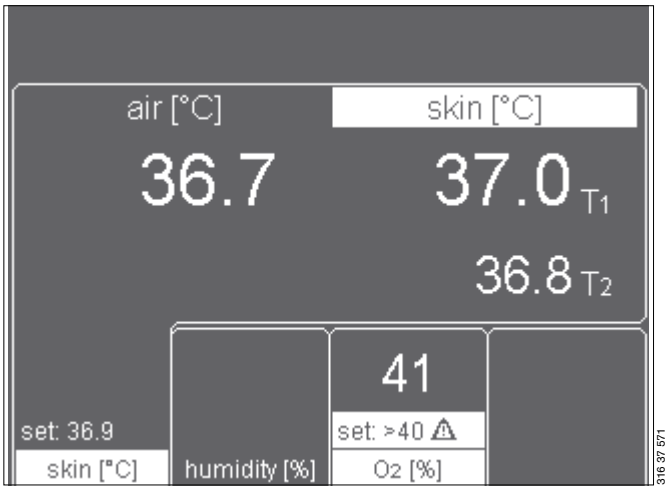

Alarms

Alarm limits can be changed in the configuration
(see page 74).

Example: if the deviation between the set and measured O_2 concentration exceeds ±*5 %*[*]:
– The screen displays the warning message »**Oxygen deviation above** *5 %*«,
– The alarm tone sequence (5 beeps) is sounded,
– The central alarm indicator lights up[**],
1 The measured value flashes,
2 The red alarm LED flashes.

The intermittent alarm tone sequence can be muted for 2 minutes:
3 Suppress intermittent alarm tone = press button
or
4 Press the rotary knob.
– The warning message remains on the screen,
– The intermittent alarm tone is muted,
– The central alarm indicator goes out,
1 The measured value continues to flash,
2 The red alarm LED continues to flash.

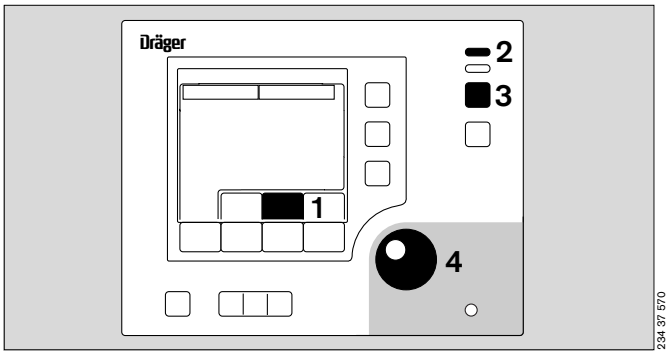

When the measured value returns within the range ±*5 Vol.%*:
– The warning message disappears,
– The intermittent alarm tone is muted,
– The central alarm indicator goes out,
1 The measured value remains on-screen but does not flash,
2 The red alarm LED goes out.

For other alarms, see "Troubleshooting – Error Messages" on page 98.
See "Alarm description" on page 123.

---

* The *numerical values* in this description are examples.
See "Setting alarms" on page 74.
** The central alarm light can be switched off.
See "Setting system parameters" on page 73.

Selecting menus

1 Select menu = press »menu« button.

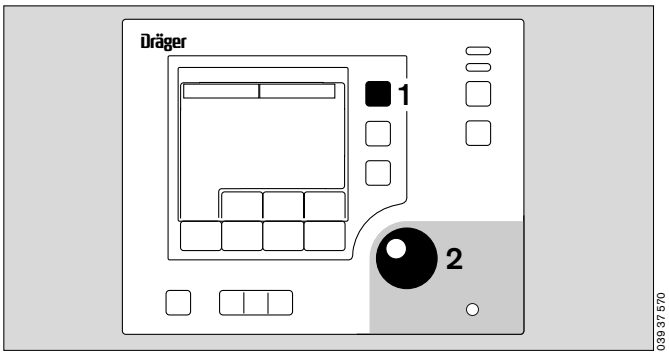

The required mode can be selected from the menu displayed:

2 Select item = turn the rotary knob.
2 Confirm selection (activate item) = press the rotary knob.

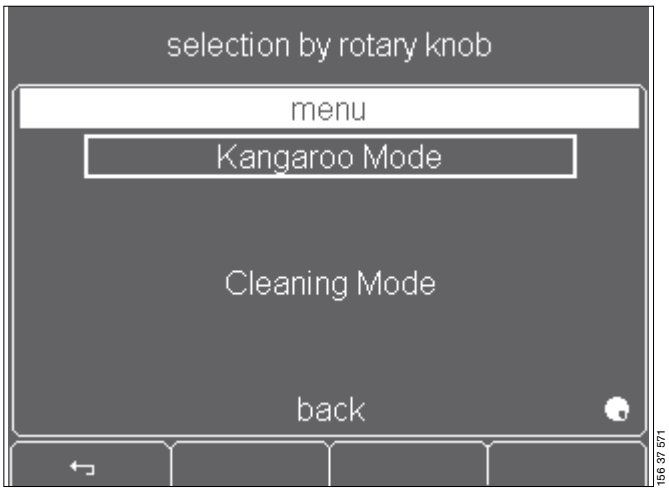

Kangaroo mode

See page 118 for a description of Kangaroo mode.

The patient's core temperature or skin temperature must be constantly monitored, becaused it is outside the controlled climate.
Particular attention must be paid to critical patients vital parameters.
Ensure that all hoses and cables are routed correctly and safely without obstruction!

In Kangaroo mode the incubator is operated in air temperature control mode.
If Caleo® was previously operated in air temperature mode, the set value for air will be activated in Kangaroo mode.
If Caleo® was previously operated in skin temperature mode, the last air temperature value will be loaded as set value. The yellow skin temperature sensor and the peripheral temperature sensor can be used in Kangaroo mode to monitor the skin temperature of the baby. The alarm limits for monitoring must be redefined (page 74).

The previously set values for
– Humidity (page 51) and
– O_2 (page 55) are retained in Kangaroo mode.

The previous set value for skin temperature control is stored in buffer memory.

Activating Kangaroo mode

1 Display the main menu = press »menu« button.

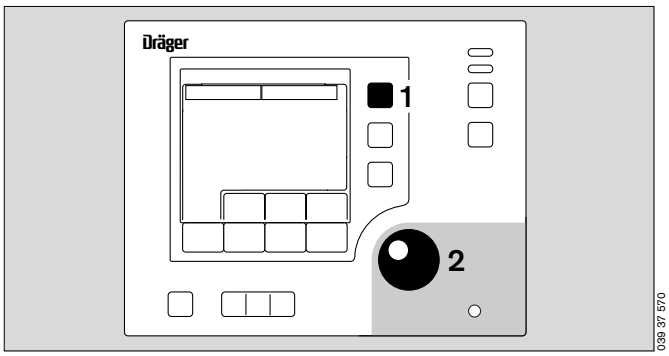

Select "Kangaroo mode" from the menu.

2 Select item = turn the rotary knob.
2 Confirm and activate item = press the rotary knob.

— The screen displays the following advisory message: »To leave the current mode please confirm the new Kangaroo Mode with rotary knob«.

2 Confirm Kangaroo mode = press the rotary knob.

— When activated, Kangaroo mode is highlighted on screen by a light background.
— The duration of Kangaroo mode can be displayed on the screen in minutes and seconds (mm:ss).

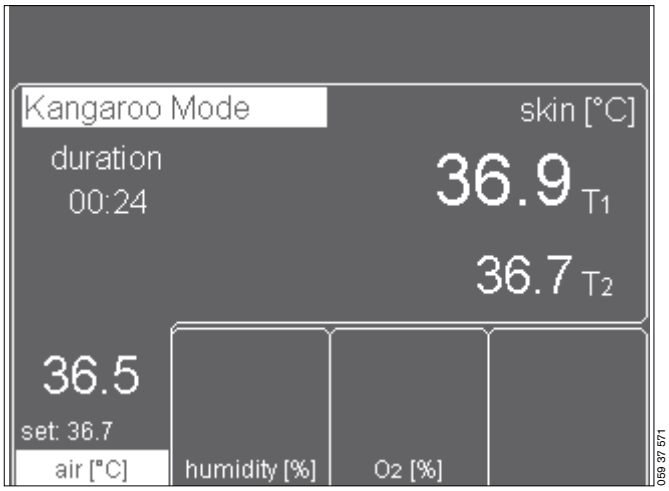

Alarm muting is automatically activated, i.e. all alarms occurring within the next 5 minutes for the following parameters
— Air temperature deviation
— Kangaroo mode
— O_2 deviation
are automatically displayed as "acknowledged" for the relevant period. See "Alarm suppression" on page 77.

● The tubing grommets can be removed from the pillar elements so that the hoses and cables remain well ordered during Kangaroo mode.

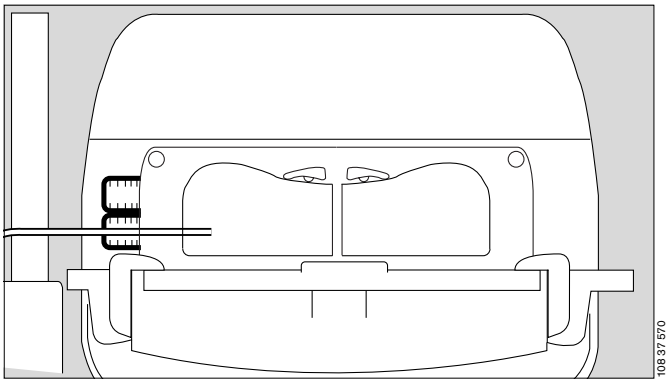

Alarms

Alarm limits can be changed in the configuration (page 74).

If the skin temperature of the yellow skin temperature sensor (skin 1) falls below the alarm limit set in the configuration:

– The screen displays the warning message **»Skin 1 temperature below** *36.0 °C* **«**[*],
– The alarm tone sequence (3 beeps) is sounded,
1 The central alarm indicator lights up[**],
2 The measured value flashes,
3 The yellow alarm LED flashes.

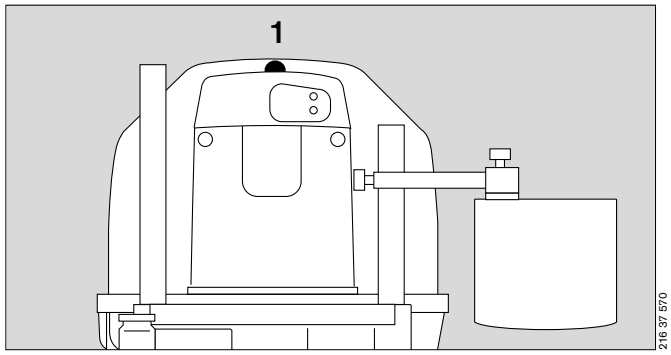

The intermittent alarm tone sequence can be muted for 15 minutes.
4 Suppress intermittent alarm tone = press button
or
5 Press the rotary knob.
– The warning message remains on the screen,
– The intermittent alarm tone is muted,
1 The central alarm indicator goes out,
2 The measured value continues to flash,
3 The yellow alarm LED continues to flash.

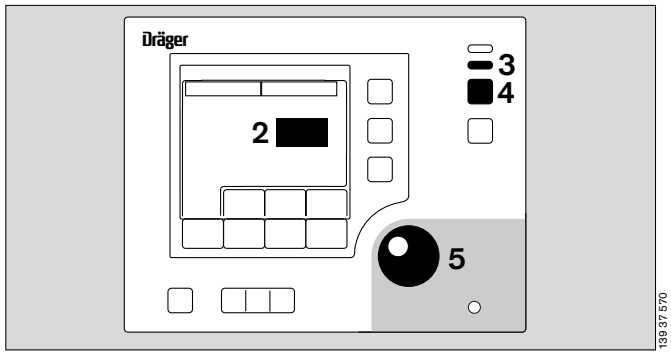

When the measured value returns above the alarm limit:
– The warning message disappears,
– The intermittent alarm tone is muted,
1 The central alarm indicator goes out,
2 The measured value remains on-screen but does not flash,
3 The yellow alarm LED goes out.

For other alarms, see "Troubleshooting – Error Messages" on page 98.
See "Alarm description" on page 123.

---

* The *numerical values* in this description are examples.
See "Setting alarms" on page 74.
** The central alarm light can be switched off.
See "Setting system parameters" on page 73.

Ending Kangaroo mode

1 Display menu list = press »menu« button.

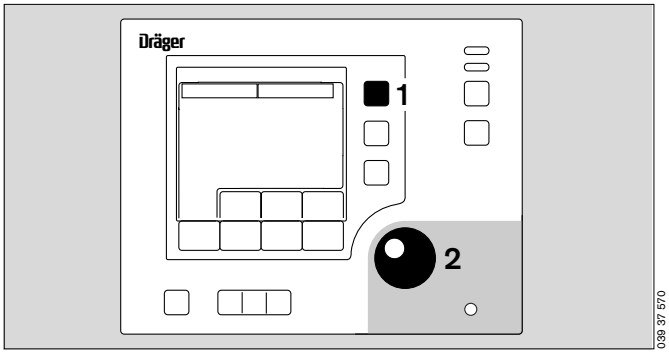

In the displayed menu, select
»Return to *Air* Mode«* or
»Return to *Skin* Mode«*.

2 Select item = turn the rotary knob.
2 Activate item = press the rotary knob.

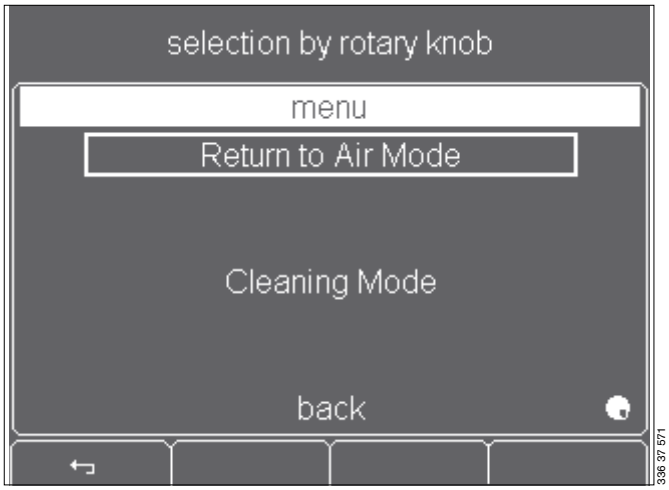

— The screen displays the advisory message
»To leave the Kangaroo mode and return to *Air* Mode confirm with the rotary knob«.

2 Exit Kangaroo mode = press the rotary knob.

The former operating status with the previous set values is reactivated. The display returns to the standard screen.

After quitting Kangaroo mode, reinsert the tubing grommets in the pillar element.

● To maintain Kangaroo mode = press »↵« key.
Or
— Wait for 7 seconds: Caleo® emits 4 short beeps to prompt the user to press the rotary knob. If the rotary knob is not pressed, the display automatically returns to the standard screen after 7 seconds, and the previous set value is retained.

* the option displayed depends on the previously activated mode

Trend display

The trend screen is used for the graphical and numerical display of the measurement parameters. The data window always shows the last data in the selected time interval.
In addition, the current measured values and set values are numerically displayed.

Switching over between standard/trend screen

1 Display trend = press » « button.

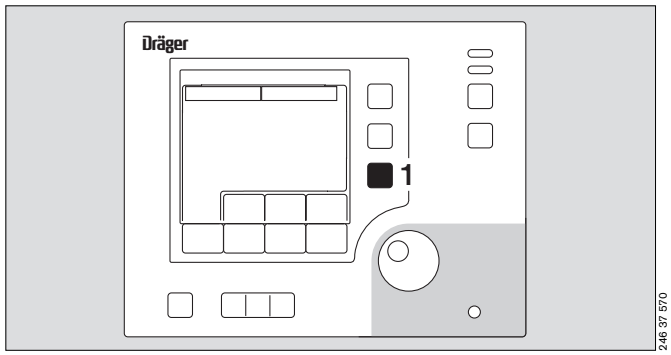

– The trend for the air temperature over the last 3 hours is displayed. The current air and skin temperature values are displayed on the right next to the trend.

– T1: Yellow skin temperature sensor (Skin 1)
– T2: White peripheral sensor (Skin 2)

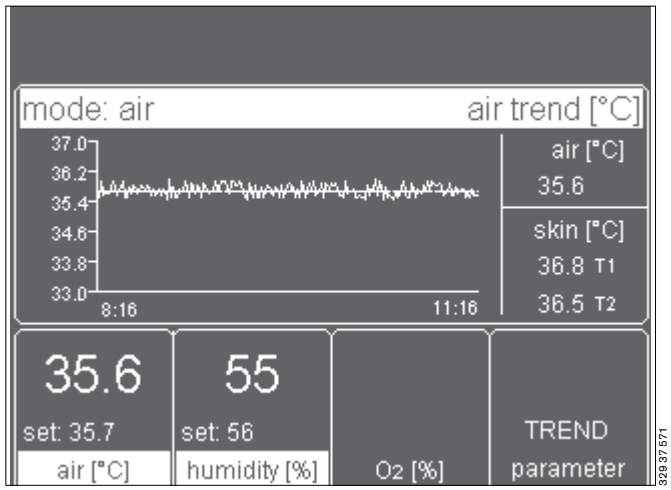

2 Select menu = press the »TREND parameter« button.

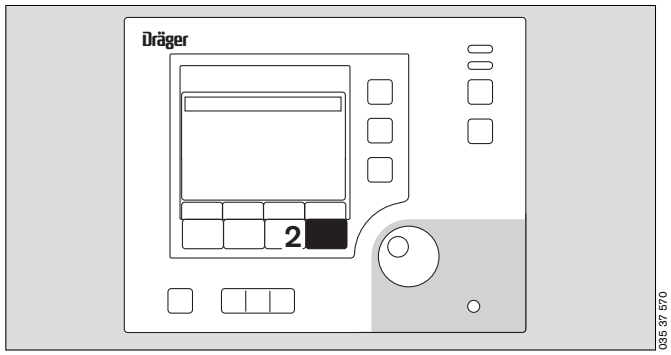

Select the desired trend display from the displayed list.

Defaults:
– Air temperature trend
– Zoom factor 3 hours

- Select trend = turn the rotary knob.
- Activate trend = press the rotary knob.

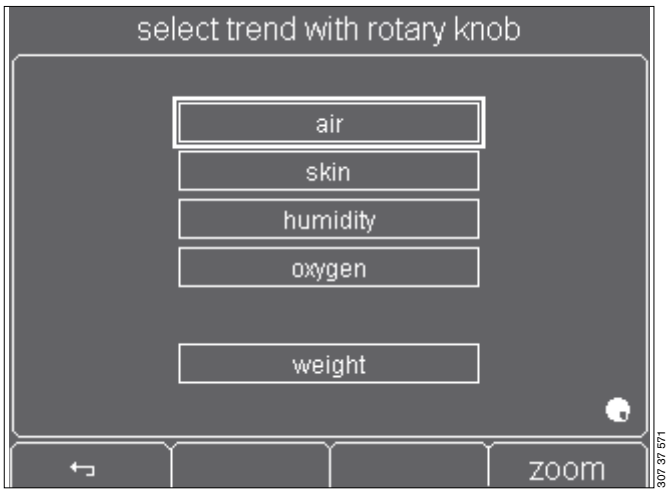

- Back to menu = press »↩« key.

- To exit trend display mode = press » 888 « button.

The display returns to the standard screen.

Setting the time interval (Zoom)

1 Display menu = press »TREND parameter« button.

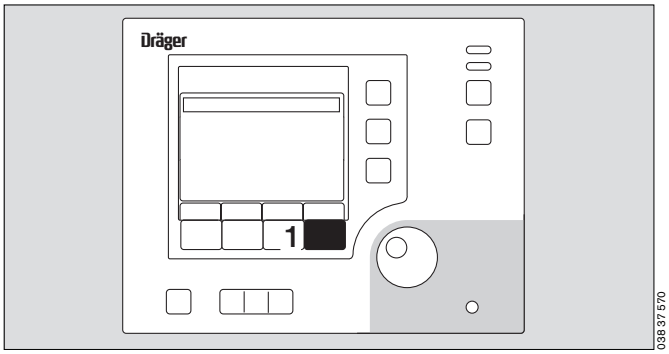

Select the desired trend from the displayed list.

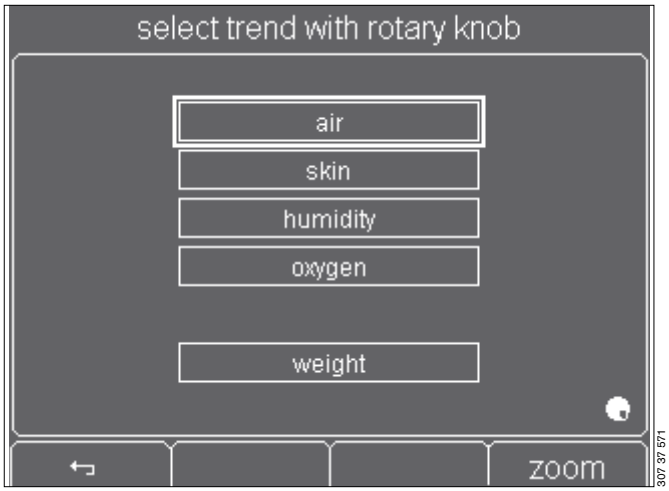

- Back to menu = press »↩« key.

1 Display the zoom menu = press the »zoom« button.

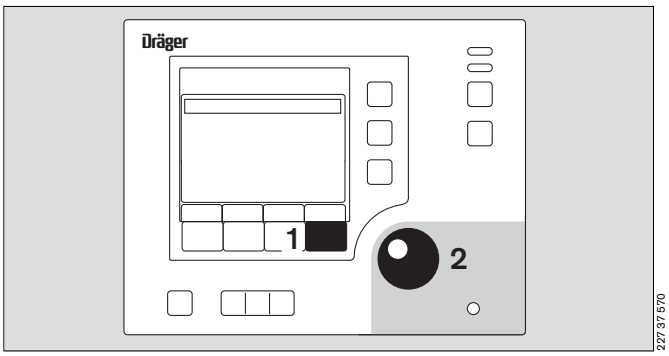

Select the desired zoom from the menu.

2 Select zoom = turn the rotary knob.
2 Activate zoom = press the rotary knob.

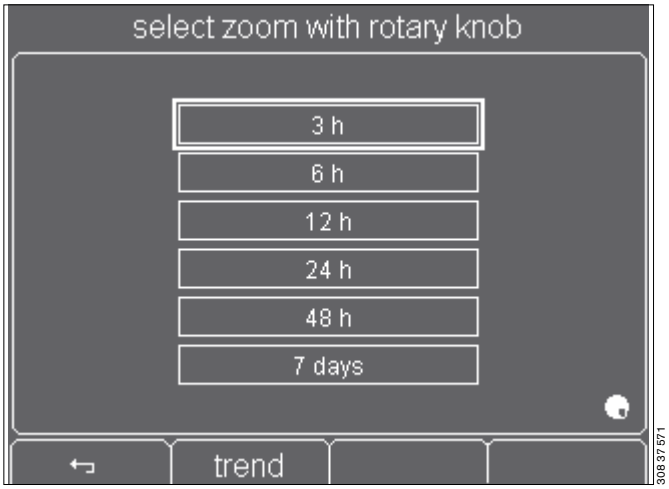

- Back to menu = press »↩« button (soft key).
- Return to trend selection = press the »trend« button

– In the illustrated example, the trend for the air temperature over the last 3 hours will be displayed.

– T1: Yellow skin temperature sensor (skin 1)
– T2: White peripheral sensor (skin 2)

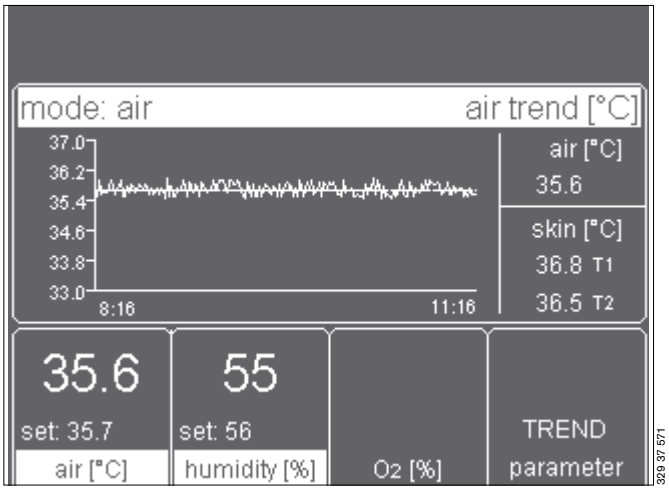

Trend analysis

Trend analysis is used for the graphical and numerical display of measurement parameters and their associated set values. The data window can be selected at will to any period over the last 7 days.
Trend analysis can therefore be used to evaluate thermo-monitoring data.
The following parameters can be set:

- Skin temperature 1
  (yellow skin temperature sensor, skin 1, T1)
- Peripheral temperature or skin temperature 2 (for twins)
  (white temperature sensor, skin 2, T2)
- Air temperature
- Relative humidity (rel. %)*
- O_2 concentration (Vol %)*.

While trend analysis is in progress, no current measured values (air, skin, etc.) are displayed. The numerical values displayed are values from past readings.

If no button is pressed for 2 minutes, the display automatically reverts to the standard screen.

1 To activate trend analysis = hold down button for 4 seconds.

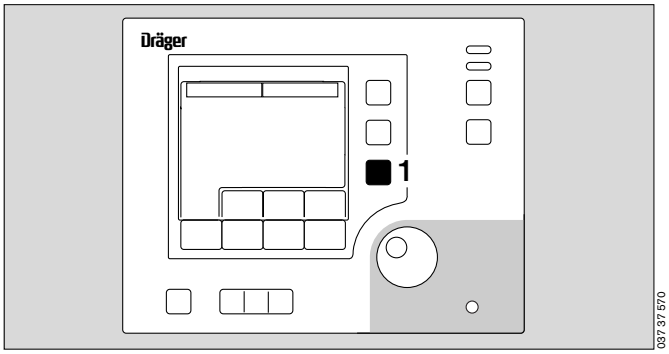

* optional equipment feature

– The trend graph for the selected measured value is displayed on the screen.

Default values:

Trend 1	Skin temperature
Trend 2	Air temperature
Zoom	3 hours

The selected value is displayed as a trend graph.
In this graph, the trend curve of the measured value is overlaid on the corresponding set value curve.

Time cursor:
The time cursor is displayed as a vertical dotted line marking a precise point of time on the graph's time axis.

- To move the time curve on the time scale = turn the rotary knob.

The time marked by the cursor line is specified underneath the dotted line by the date and time. The start time and end time of the current time window are specified to the right and left underneath the trend graph.
If the time cursor is moved beyond the displayed time range, the screen adapts automatically and displays the relevant time range:

- Less recent time range = turn the rotary knob counter-clockwise.
- More recent time range = turn the rotary knob clockwise.

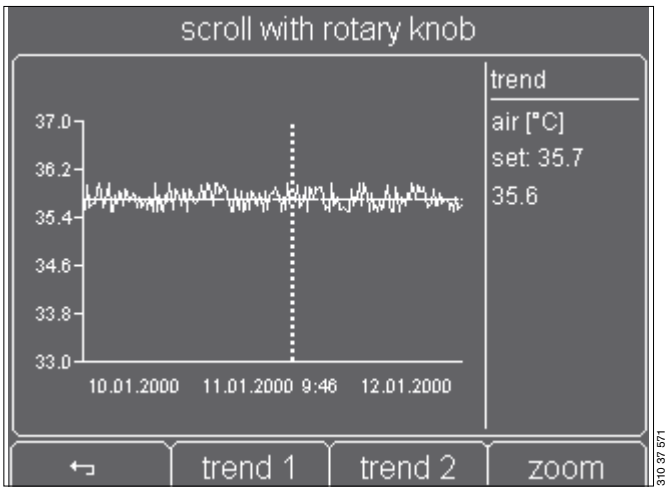

Data window:
The time cursor is associated with a data window situated to the right of the displayed trend. This data window shows the numerical values valid at the time marked on the time axis by the time cursor.

The following values are displayed in the data window:

1 Name of the selected parameter
2 Set value of this parameter at the marked time
3 Measured value at the marked time

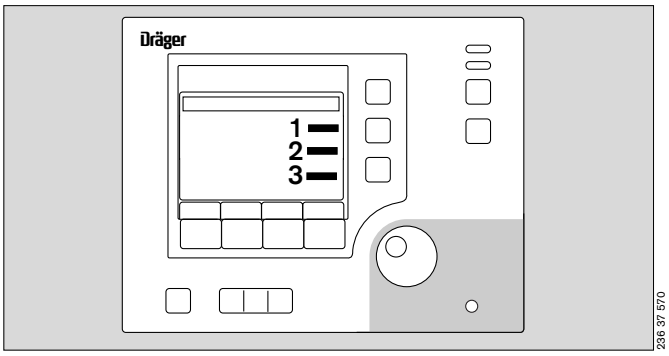

Trend selection

A trend graph can be selected with the soft keys.

Soft Key assignments:

1 ↩ = Cancel. New settings will not be activated.

2 trend 1 = Select trend 1.

3 trend 2 = Select trend 2.

4 zoom = Select time interval.

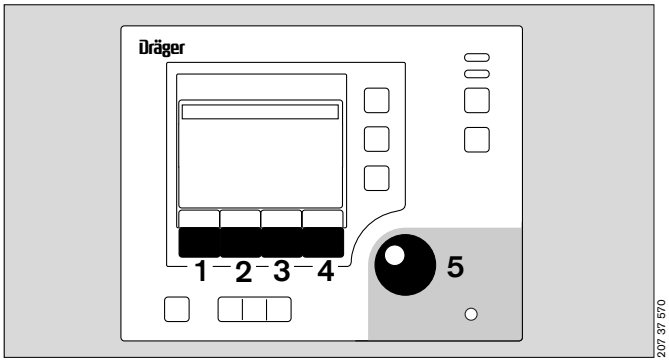

Select trend 1:
2 Display the trend 1 menu = press soft key.
The following parameters can be selected as "trend 1":
– air
– skin
– humidity*
– O2*
– weight*

5 Select trend 1 = turn rotary knob.
5 Confirm (activate) selection = press rotary knob.

The newly selected trend will be displayed on the screen.

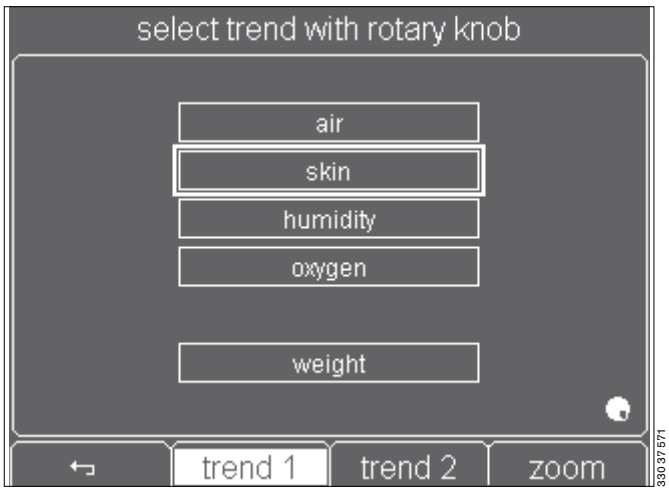

Select trend 2:
3 Display the trend 2 menu = press soft key.
The following parameters can be selected as "trend 2":
– air
– humidity*
– oxygen*
– weight*
– disable

5 Select trend 2 = turn rotary knob.
5 Confirm (activate) selection = press rotary knob.

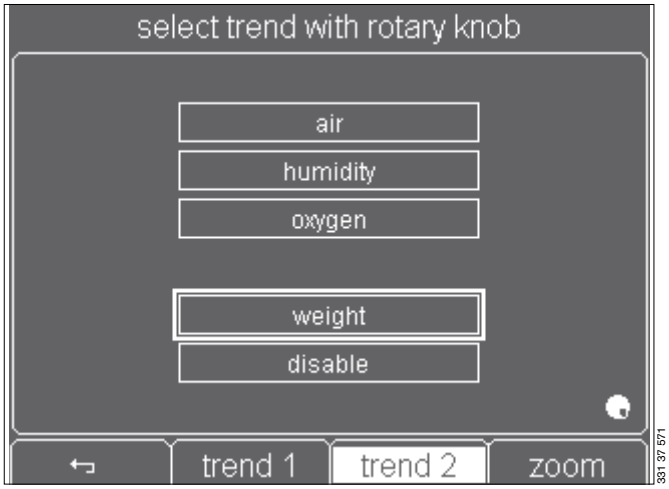

* optional equipment feature

The newly selected trend 2 is displayed on the screen underneath trend 1. In addition, a second data window containing the relevant parameters is opened next to trend 2. The time cursor and time range (zoom) are the same for both trend displays.
The »disable« option removes trend 2 from the screen, so that only trend 1 is displayed.

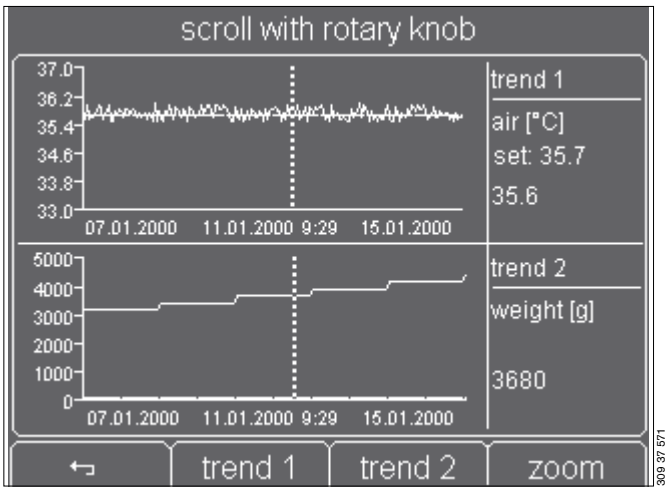

Selecting the time interval (zoom)

1 Open the Zoom menu = press soft key.

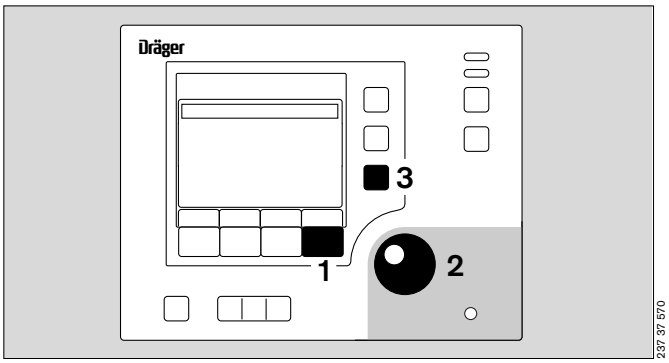

The following intervals of time can be selected for the time window (zoom) function:
3; 6; 12; 24; 48 hours or 7 days.

2 Select zoom = Turn rotary knob.
2 Activate zoom = Press rotary knob.

The selected trends will then be displayed in the newly selected time window.

All data going back a maximum of 7 days can be displayed. The individual measuring points together with the associated data for the data window are displayed.
When displaying the measured weight values, up to 30 values can be stored and displayed as a trend. Values between the individual measured values are interpolated.

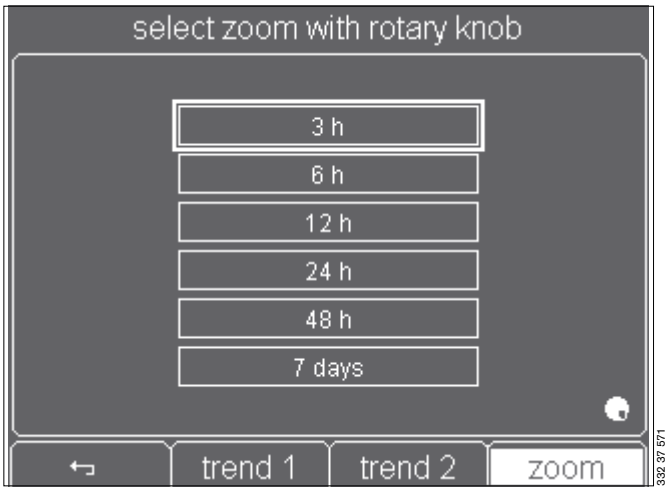

Ending trend analysis

To exit trend analysis

- Back to menu = press »↩« soft key button

or

3 Terminate trend analysis = press button

or

if no soft key on the screen is pressed for 2 minutes, the display will automatically revert to the standard screen.

Cleaning mode*

Cleaning mode is only available if Caleo® is equipped with humidity control.

Cleaning mode may only be used when Caleo® is **empty**.

In cleaning mode the water heater is boiled empty and then cooled.

Cleaning mode lasts about 60 minutes.

1 Open menu = press the »menu« button.

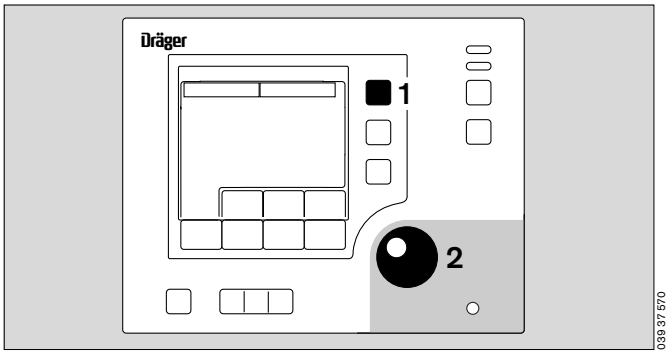

Select "Cleaning Mode" from the displayed menu.

2 Select item = turn the rotary knob.
2 Confirm (activate) item = press the rotary knob.

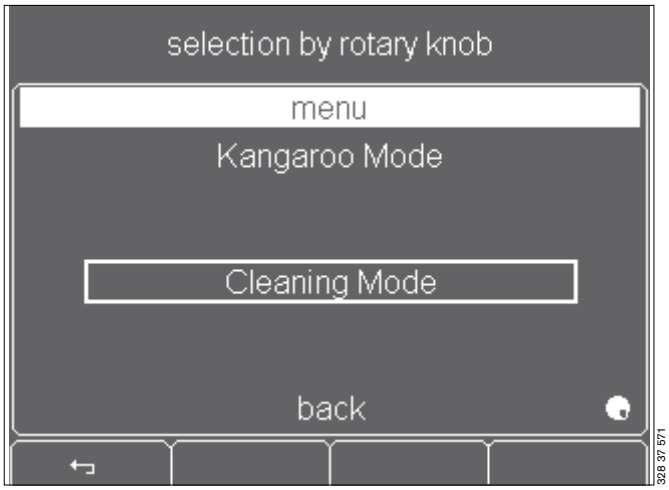

– The required operating steps are specified on the screen:
»disconnect Luerlock connector from apparatus
make sure that no patient is inside
start Cleaning Mode by
pressing ▼▼▼▼ keys.

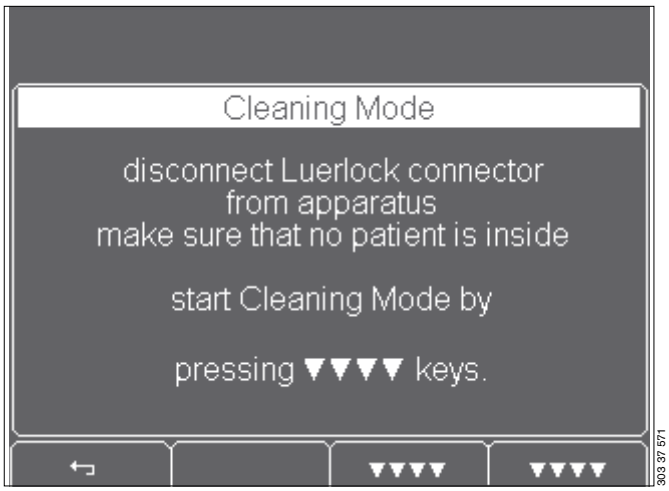

* optional equipment feature

- Start Cleaning Mode = press both soft keys simultaneously.

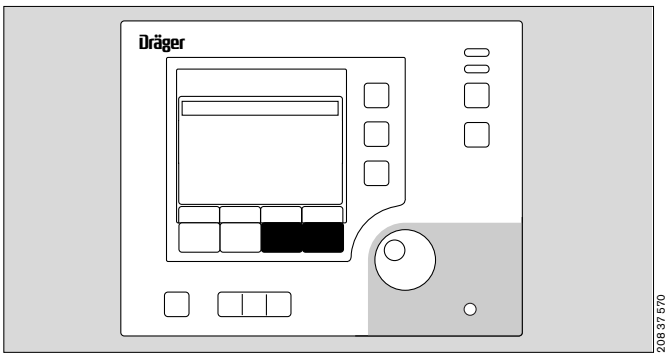

208 37 570

The water heater is boiled dry.
The heater is then cooled.

Risk of burns on contact with the heater!
Do not disassemble Caleo® during cleaning mode.

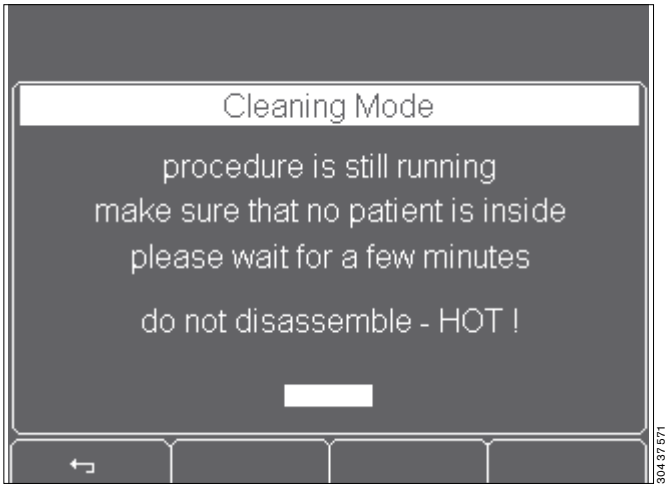

304 37 571

– The screen indicates when cleaning mode is complete.

- Confirm end of cleaning mode = press rotary knob.

Caleo® performs a restart.

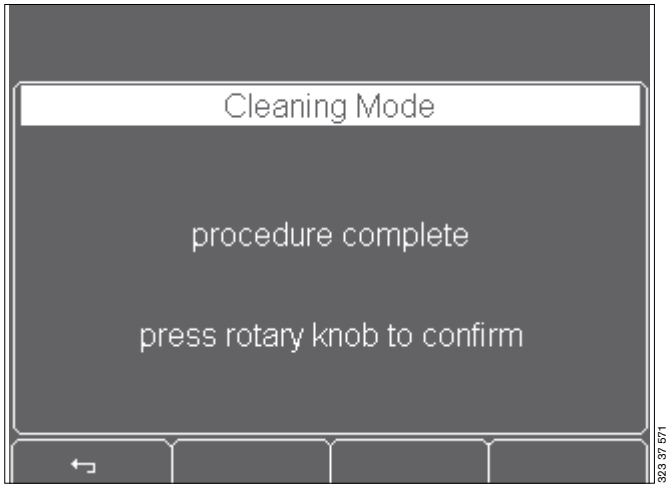

323 37 571

After ending cleaning mode:
– Disinfect and clean Caleo® (see "Disinfecting/Cleaning/Sterilising" on page 84).

Configuration

In configuration mode, you can set
– Language, date and time
– System parameters and
– Alarm parameters
and
you can obtain information on
– O_2 sensors
– the software version.

Activating configuration mode

1 Activate configuration mode = hold down the »menu« button for 4 seconds.

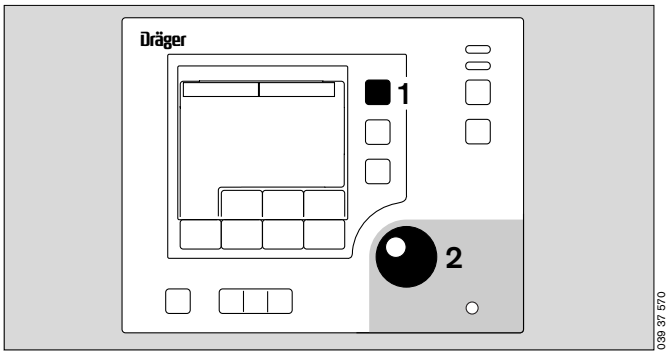

The individual parameters of the configuration can now be selected.

2 Select configuration parameters = turn the rotary knob.
2 Activate the configuration parameters = press the rotary knob.

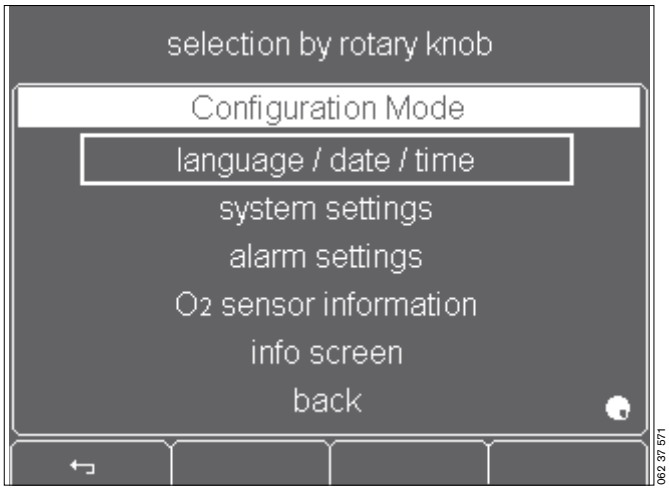

● Cancel selection = press »↩« key.
– The display returns to the standard screen.

Language/date/time

1 Select language/date/time = Turn and press the rotary knob.

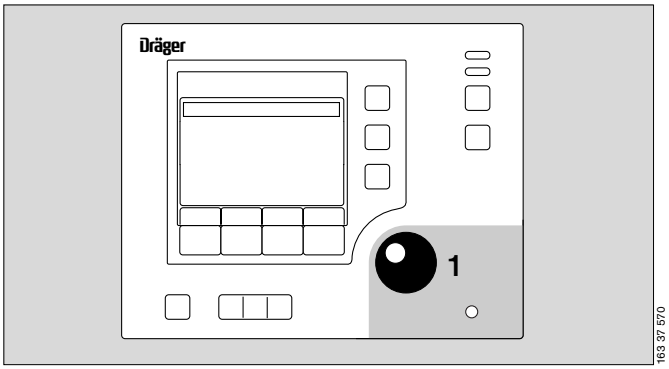

– The language selection box is highlighted by a bright border.

1 Select language = turn the rotary knob.
1 Confirm language = press the rotary knob.

– The selected language is displayed on the screen.

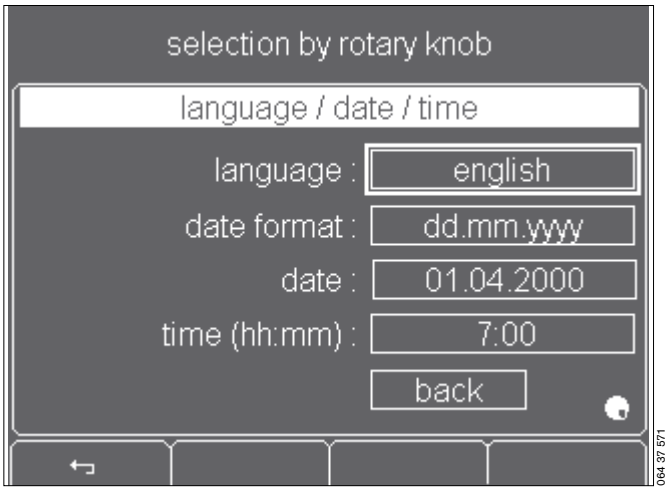

Follow the same procedure to set the date format, date and time.

1 Save settings = turn the rotary knob to »back« and then press the control button.

● Cancel selection = press »↩« soft key button.

– The display returns to the configuration parameter selection menu (see page 71).

Setting system parameters

1 Select the temperature unit = turn and press the rotary knob.

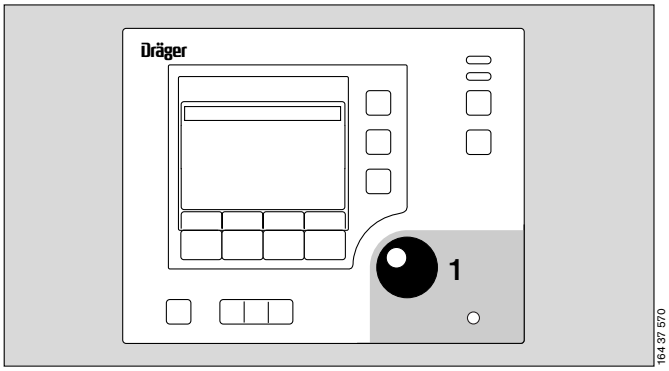

– The temperature unit is highlighted by a light background.

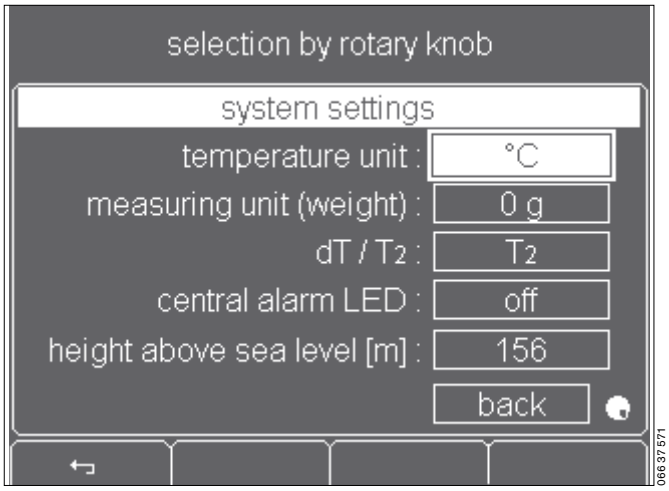

1 Select unit = turn the rotary knob.
1 Confirm unit = press the rotary knob.

– The selected unit is displayed on the screen.

The weight unit, dT/T2 display, central alarm indicator and altitude above sea level* can be selected by the same procedure.

– The weight unit can only be set if the optional weighing scale is integrated in Caleo®.
– If using 2 skin temperature sensors, the screen can display T1 and either T2 or the difference between T1 and T2 (dT).
– If the central alarm light is deactivated, alarm situations are only indicated by the flashing "Alarm" LED on the control panel and the alarm beep signal.
– The altitude above sea level* can only be set if O2 control is integrated in Caleo®.
  If the local altitude is entered incorrectly, the measurement accuracy of the O2 sensors will be reduced (e.g. 1.5 % additional error for 1000 m difference in altitude).

● Cancel selection = press »↩« soft key button.

– The display returns to the configuration parameter menu (see page 71).

* Altitude above sea level.

Setting alarms

1 Select alarms = turn and push the rotary knob.

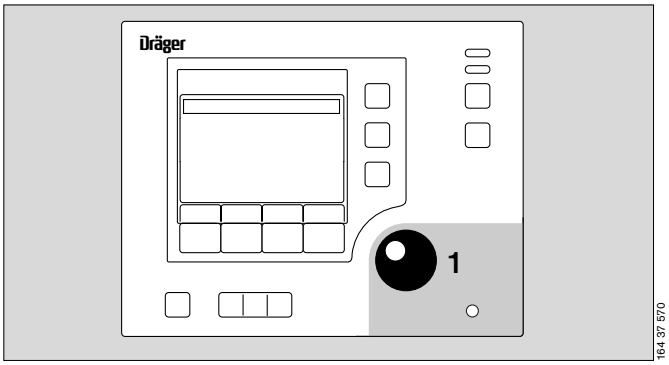

– The menu that is then displayed allows the user to select Kangaroo mode, the initial volume of the audible alarms and the alarm limits for temperature control and O_2 control.

1 Select menu item = turn rotary knob.
1 Confirm menu item = press rotary knob.

● Cancel selection = press »↩« soft key button.
– The display returns to the configuration parameter selection menu (see page 71).

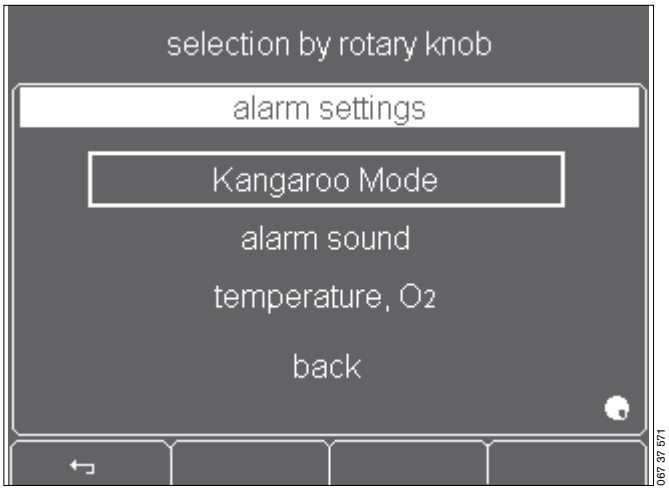

Kangaroo mode:

Adjustment ranges:

Skin alarm T1 min	33 °C to 37 °C and off
Skin alarm T2 min	33 °C to 37 °C and off
dT alarm min	–2 °C to 2 °C and off
dT alarm max	2 °C to 5 °C and off
Default values:	Same as last setting

The *text* items in the description that follows are examples:
1 Select skin alarm *T1 min* (lower alarm limit for skin temperature) = turn and press the rotary knob.
– The *T1 min* alarm selection box is highlighted by a bright border.
1 Select alarm = turn the rotary knob.
1 Confirm alarm = press the rotary knob.
The display returns to the alarm settings menu (page 74).

The other alarms are set by the same method.

● Cancel selection = press »↩« soft key button.
– The screen returns to the configuration parameters menu (see page 71).
For a description of Kangaroo mode alarms please refer to page 119.

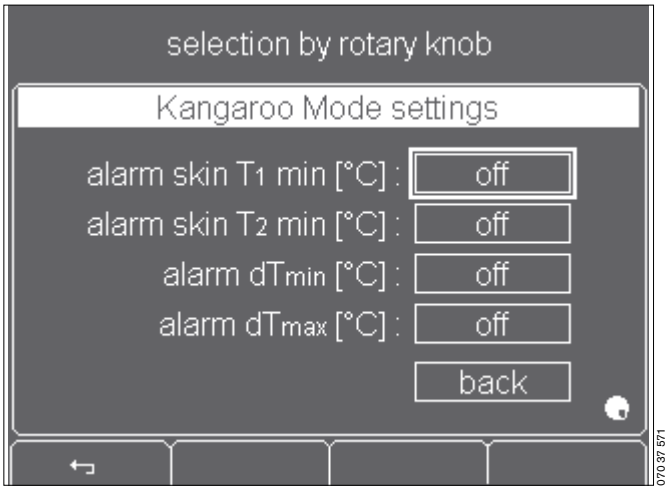

Initial volume (sound intensity) of the alarms:

Adjustment range: 1 to 8

Default: 1

– The initial sound intensity is highlighted by a light background.

● Set an initial sound intensity = turn rotary knob.
● Confirm initial sound intensity = press rotary knob.
The screen returns to the alarm settings menu (page 74).

● Cancel selection = press »↩« soft key button.
– The display returns to the configuration parameter menu (see page 71).

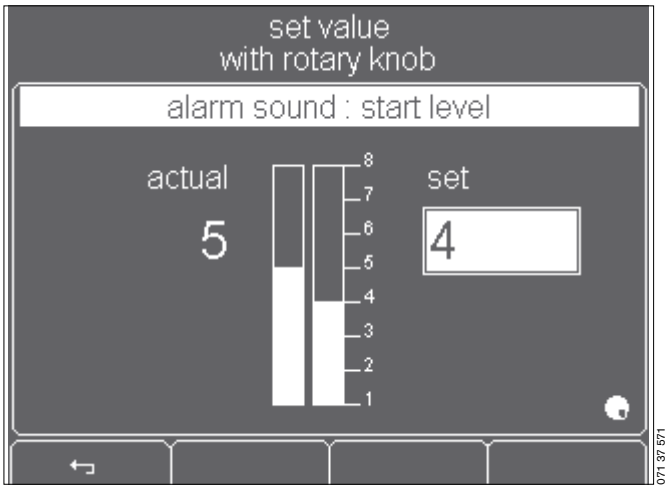

Alarm limits:

Adjustment ranges:

Air temperature deviation	–1.5 or –2.5 °C
Skin temperature deviation	±0.3 to 1.0 °C
O_2 deviation*	±3 % or ±5 %

Default values:

Air temperature deviation	–1.5 °C
Skin temperature deviation	±0.5 °C
O_2 deviation*	±5 %

● Select the alarm limit for air/skin temperature and O_2* = turn and push the rotary rotary knob.

– The alarm limit setting for the deviation in air temperature is highlighted by a bright border.

● Select air temperature deviation = turn the rotary knob .
● Confirm air temperature deviation = press the rotary knob.

The screen returns to the alarm settings menu (see page 74).

The other alarm limits are set in the same way.

● Cancel selection = press »↩« soft key button.
– The display returns to the configuration parameter menu (see page 71).

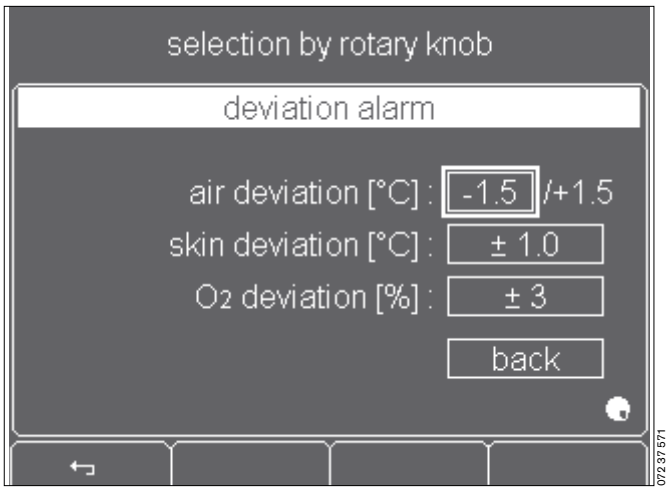

* optional

O_2 sensor information*

The screen displays the following information for the O_2 sensors used:
– Date of manufacture
– Date of last calibration
– Date of next calibration.

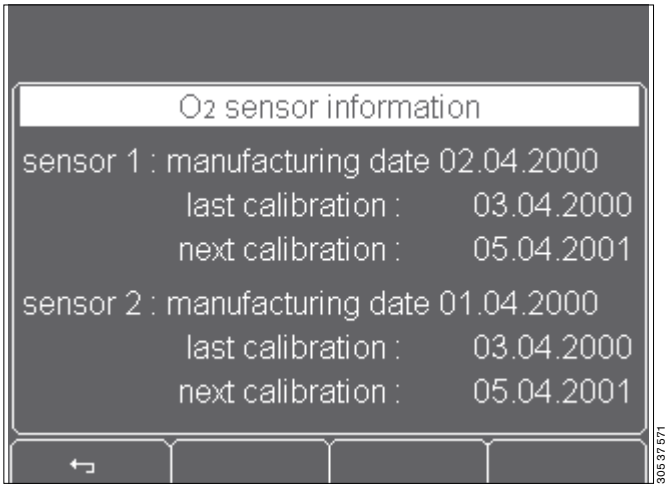

Viewing software information

– The software version and the number of operating hours are displayed on the screen. Where applicable, this screen contains additional information on service intervals. Further information on this subject is provided in the service documentation.

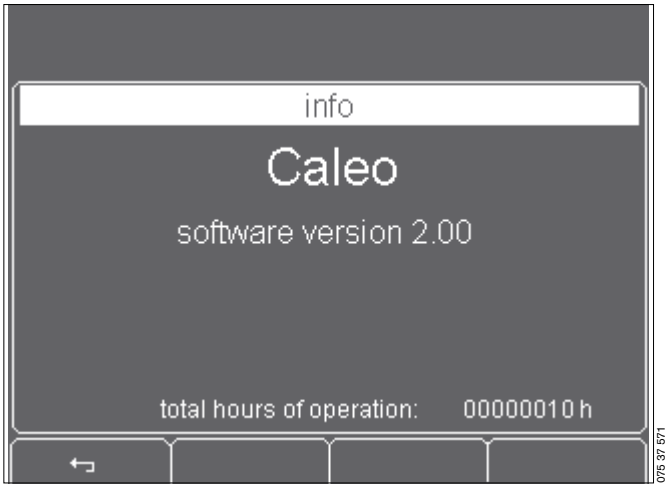

1 Return to configuration parameter menu = press soft key button

or

2 Press the rotary knob.

– The display returns to the configuration parameter menu (see page 71).

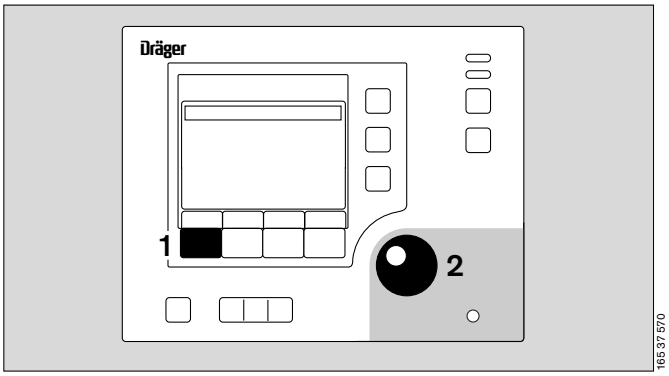

* optional equipment feature

Lock key pad functions

1 To lock further on-screen setting = press button.
1 The LED on the button lights up.

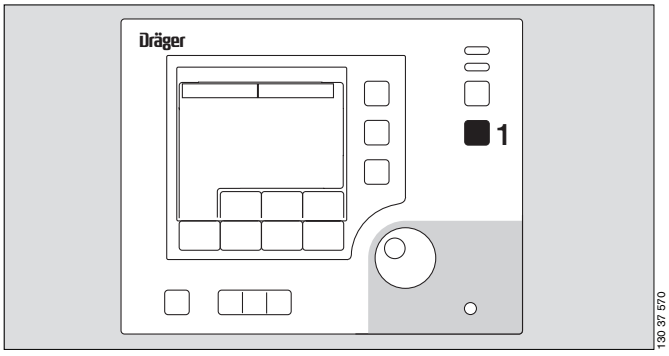

– After 4 seconds, all screen functions are locked, **except for**:
1 Lock key pad function
2 Alarm suppression
3 Rotary knob
4 Bed tilt.

1 The LED in the button remains lit.

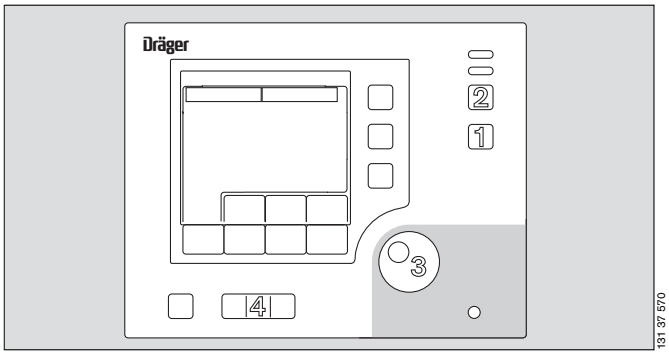

Enabling
1 Change setting on screen = press button.
1 The LED in the button goes out.
– After 4 seconds, the screen functions can be changed. The LED in the button remains off.

Alarm suppression

2 Pressing this key if an alarm is active:
– The audible alarm is muted
– The central alarm indicator goes out*.
2 The LED in the button is not lit.
The permitted duration of alarm suppression depends on the type of alarm. When the cause of the alarm is removed, alarm suppression is automatically ended.

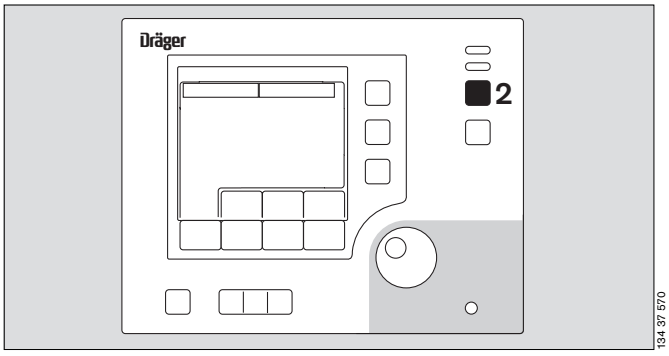

2 Pressing this key if no alarm is active (alarm muting):
For all alarms occurring in the next 4 mintues, of the type
– Air temperature deviation
– Skin temperature deviation
– O_2 deviation,
no alarm tone will be sounded, and the central alarm indicator will not be lit.
However: the alarm message is displayed on the screen, and the LEDs for the measured value and alarm flash.
2 The LED in the button will be lit.

---

* The central alarm light can be switched off.
See "Setting system parameters" on page 73.

Weighing scale*

The weighing scale is located directly underneath the bed. In the weighing process, the entire bed and the items placed on top of it are weighed with the baby. However, these extras are deducted again as soon as the baby is lifted off the bed (tare weight), so that precise weighing of the baby is possible. Before weighing, check that the bed is fully pushed in and is in the horizontal position.
The scales must be regularly checked by a test weight. The accuracy specified in the technical data of the scales is only obtained if the scales have been calibrated at the installation site.

The spirit levels show whether the bed is aligned horizontally.
1 Spirit levels for the horizontal alignment of Caleo® in the transverse axis.
2 Spirit level for the horizontal alignment of Caleo® in the longitudinal axis.

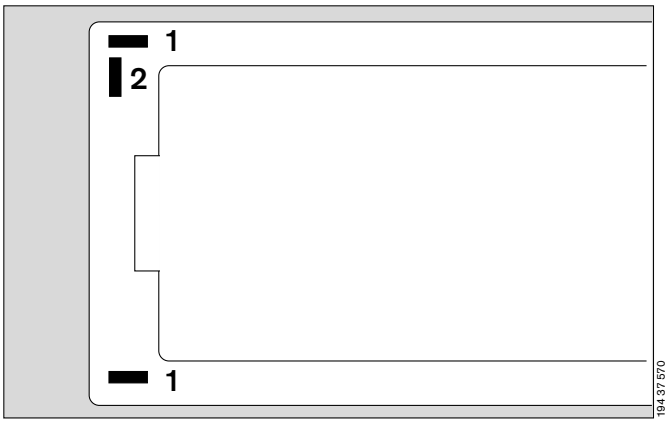

To align the bed horizontally see page 23.

During the weighing process, Caleo® must not be exposed to any vibrations.

During the weighing process, no objects may be placed on the bed surface.

During the weighing process, no objects may be placed been the bed and the housing.

The weighing accuracy may be adversely affected when using the ventilation hose holder.

Starting the weighing procedure
- Remove the supply line or any other objects that touch the bed and fixed environment (trough and incubator frame) at the same time.

3 Activate the weighing process = Press button.

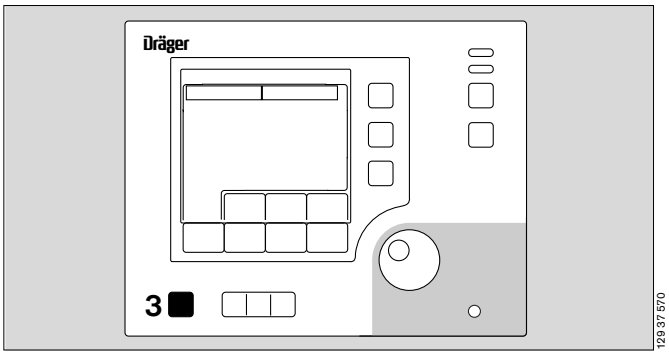

If the scale is **not** ready for operation, this function cannot be activated.

* optional equipment feature

During weighing, the user is guided through the sequence of operating steps by the following prompts:

- Please adjust Caleo® to horizontal position (see page 23).
- Turn knobs to X-ray position (see page 21).
- Lift baby clear of mattress.

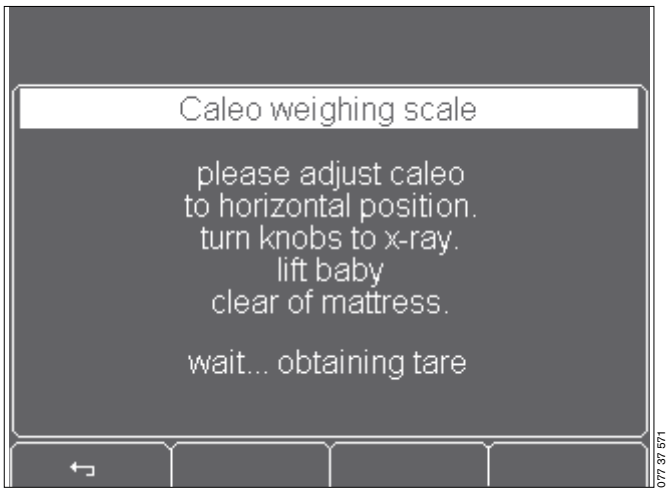

The system waits until at least 250 g have been taken off the scale and the scale has been at rest for 3 seconds. The tare is determined.

— 1 beep is sounded.

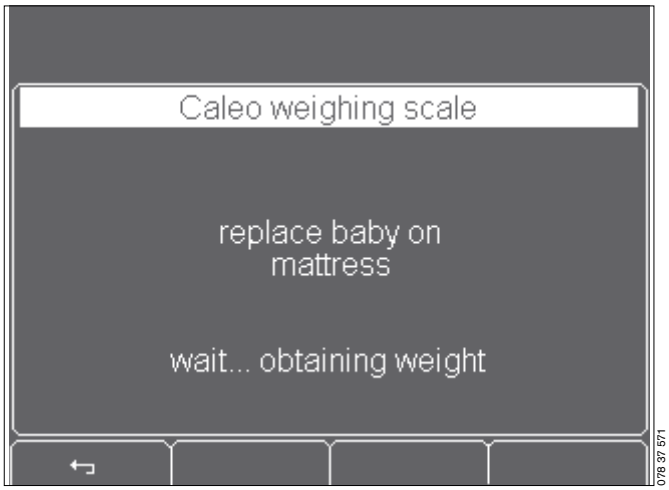

- Place patient on bed.

The system waits until at least 250 g have been added to the scale and the scale has been at rest for 3 seconds. Weighing then proceeds.

— 1 beep is sounded.

The weighing procedure is complete.

— The current and last weighing results are displayed on the screen.

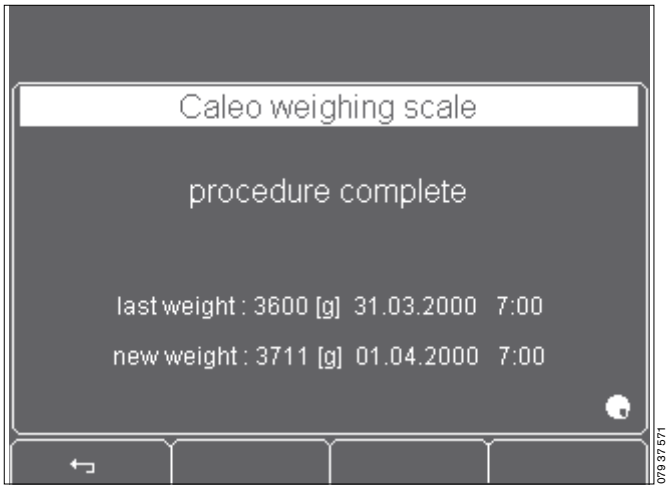

After 30 seconds, the display reverts to the standard screen.
or
- Display the standard screen = press the rotary knob.

The screen displays the last weight as advisory text for the next 10 minutes.

Weighing process cancelled
The weighing process is cancelled if the scales are not unloaded or loaded within 30 seconds.
— 3 short beeps are emitted.

Weighing without tare

If the last tare weight was obtained no longer than 60 minutes earlier, and if no objects have since been removed from the bed or placed on it, recalibration with a new tare weight is not necessary.

1 Activate the weighing process = press soft key.

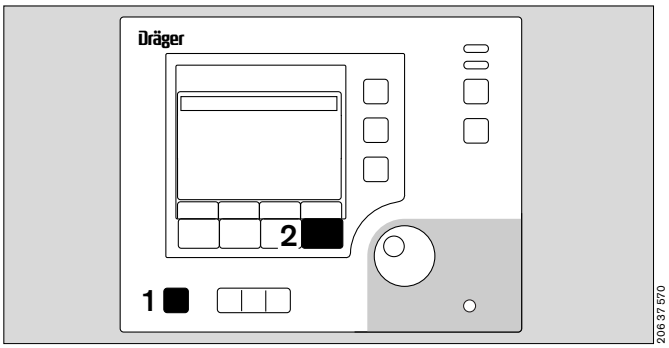

Caleo® proposes reweighing directly without obtaining a new tare.

2 Weigh without tare = press button.

— Lay the patient on the bed.

The system waits until the weighing scale has remained at rest for 3 seconds. Weighing then proceeds.

— 1 beep is emitted.

The weighing procedure is ended.

— The present and last weights are displayed.

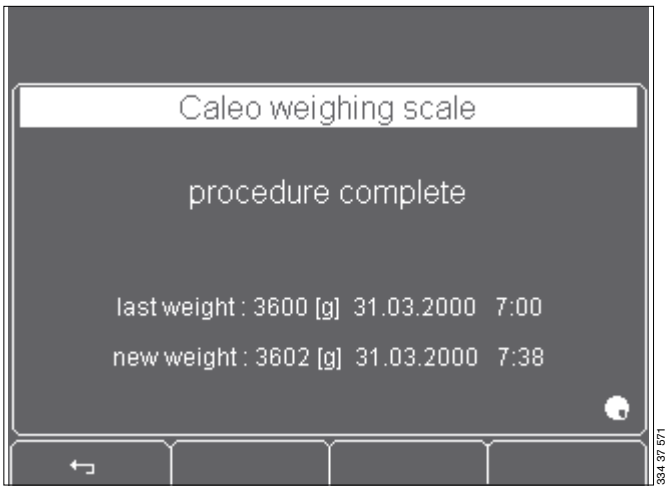

After 30 seconds, the display reverts automatically to the standard screen.
or
- Display the standard screen = press the rotary knob.

The screen displays the last weight as advisory text for the next 10 minutes.

Ending operation

Switch off incubator

1 Switch off the incubator = press the on/off switch.

The incubator is switched off.

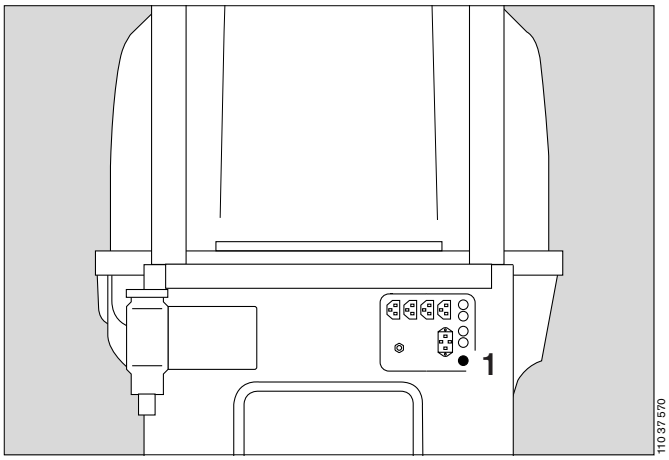

If the O_2 hose is connected:*

– Disconnect the probe from the outlet of the central O_2 supply pipeline and place it in the "Park" position (strictly follow the separate Instructions for Use).

* optional equipment feature

Care

Contents

Disinfecting/Cleaning/Sterilising 84

Stripping down 86
Before reusing for a patient 92
Care list 94

Maintenance intervals 95

Disposal 96

Disinfecting/Cleaning/Sterilising

Risk of burns on contact with the heater
When the incubator is closed, the heater is still hot enough to cause serious burns for a long time after switching off (still approx. 70 °C after 1 hour).

Clean and disinfect the incubator thoroughly:
- after each change of patient
- at least once a week.

Clean and disinfect the accessories, such as the suction equipment and the flowmeter in accordance with their separate Instructions for Use.

Disinfecting/cleaning/sterilising

Use surface disinfectants for disinfecting.
For reasons of material compatibility, use disinfectants based on
- aldehydes
- quaternary ammonium compounds.

Due to the chemical composition and direct effects on material compatibility, the following products are only suitable to a limited extent:
- Halogen-releasing compounds
- Strong organic acids
- O_2 releasing compounds.

Use only cleaning agent in autoclaves and other cleaning and disinfecting machines. Do not use any alkaline or chlorine releasing disinfectants, due to the risk of corrosion. As a general rule, the manufacturer's recommendations must be taken into account when choosing a cleaning agent. Liability for the specified use and for any material damage that may be caused by the product rests with the manufacturer.

Do not use any disinfectants or cleaning agents containing alcohol.

We recommend the use of disinfectants based on the current DGHM list (DGHM: German Society for Hygiene and Microbiology).
The DGHM list (published by mhp Verlag GmbH, Wiesbaden) also gives the composition of each disinfectant.
For countries where the DGHM list is not familiar, we recommend the types of disinfectant specified above.

The following surface disinfectants are recommended:

Surface disinfectants	Manufacturer
Dismozon® pur	Bode Chemie GmbH & Co., Germany
Incidur®	Henkel-Ecolab Deutschland GmbH
Trichlorol	Lysoform, Germany
Virkon	Tetenal, Germany
Bacillol 25	Bode Chemie GmbH & Co., Germany
Seculyse	Paragerm (Henkel Ecolab), France
Sekupoudre	Paragerm (Henkel Ecolab), France
Vaposeptol	Paragerm (Henkel Ecolab), France
Cidex	Johnson & Johnson, Taiwan
Habitane	Zeneca Limited, Norway
Kloramin	Norsk Medisinal Depot A/S, Norway
Sactiv	Diversey Lever, Finland
Viraclean	Whiteley, Australia

Note the manufacturer's directions for use.

Do not treat Caleo® and its components in formaldehyde vapour or ethylene oxide.

The following materials are used in the patient capsule:

Components	Material
Canopy, flaps	Polycarbonate
Support pillar units	Styrene-butadiene thermo foam rubber
Bed	Styrene-butadiene thermo foam rubber
Housing	Polystyrene
Caleo® SoftBed™	Polyurethane/polyester

Stripping down

Check the fresh air filter

⚠ **Use the original Caleo® air filter (MX 17 015) only! Risk of fire!**

- Tilt the unit to remove the fresh air filter more easily (see page 23).

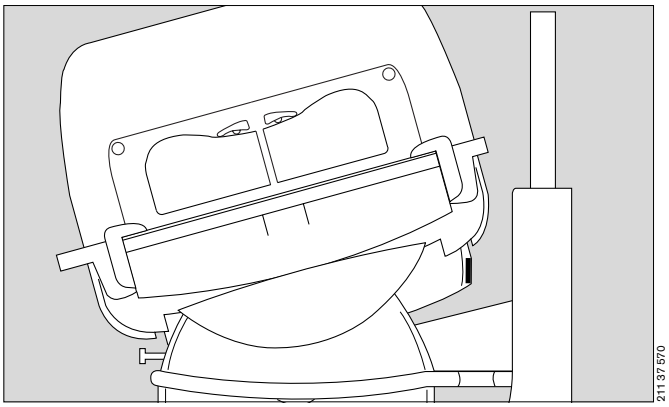

1 Pull the holder for the fresh air filter downwards and remove.

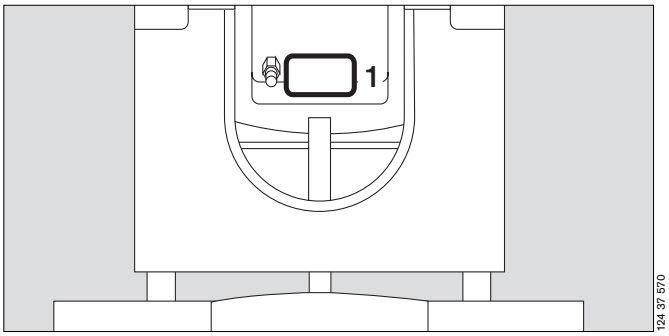

2 Check that the seal on the filter box is in place.

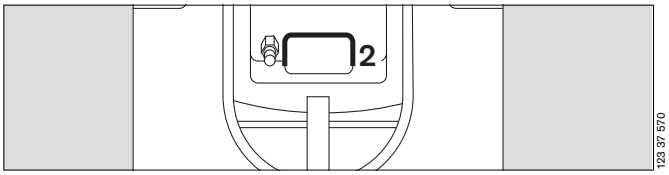

Fitting the filter

3 Separate the filter holder and
4 filter frame at the snap-in fastening.
5 Insert the filter.
- Close the filter holder and filter frame.
- Mark the next due date for replacement of the new filter (2 months after installation) on the label and
6 Stick the label to the filter holder.

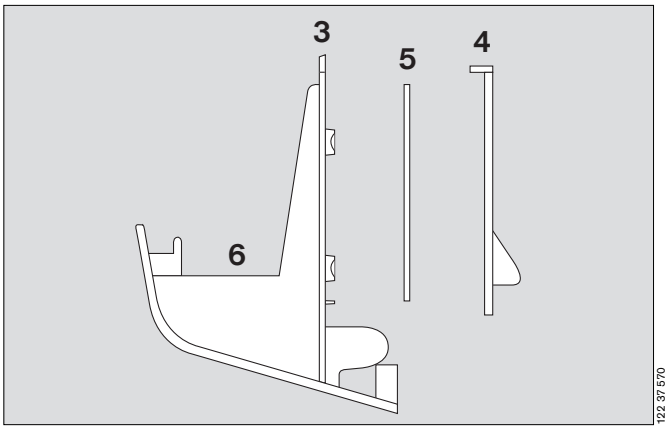

If a filter is already installed:
- Check the condition of the filter.
- Check the due date for replacement. The label is on the filter holder.

If the filter is fouled, damaged or moist, or if the due date for replacement has been reached:
- Discard the old filter.
- Fit a new filter.

Removing the water supply

- Close the clamp on the connection tube.
- Remove and dispose of the water bag and connection tube

or

1 Remove the water container from the holder.
2 Detach the connection tube from the water container and water connection pipe.

- Dispose of the connection tube.

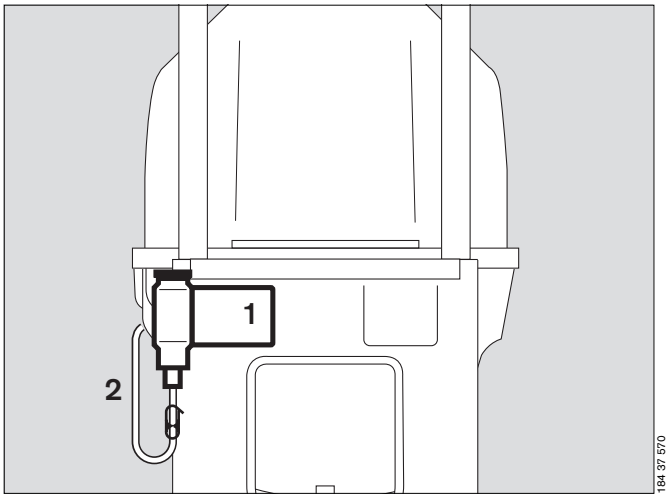

- Clean the water container in the cleaning and disinfecting machine at 93 °C*

or

- sterilise at 134 °C*.

Removing the water connection pipe

- Tilt the incubator to make the water connection pipe easier to remove (see page 23).

3 Turn the water connection pipe 90° clockwise and pull it out of the guide channel.

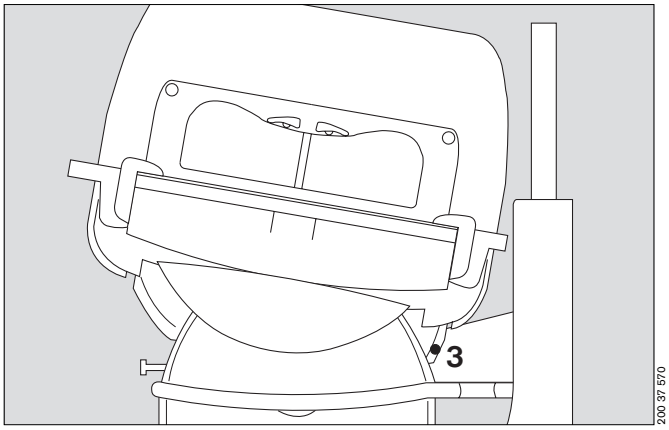

- Clean the water connection pipe in the cleaning and disinfecting machine at 93 °C*

or

- sterilise at 134 °C*.

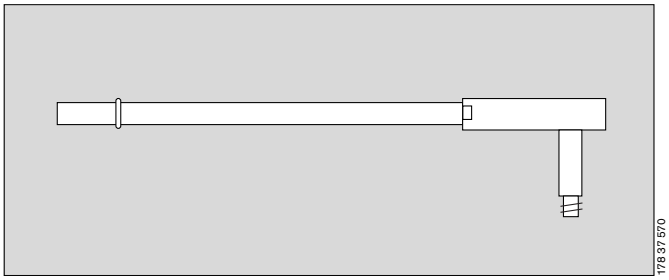

* Observe national and international standards on cleaning, disinfecting and sterilisation procedures (e.g. EN 285, EN 554, EN 556).

- Place Caleo® horizontal (see page 23).
- Switch on cleaning mode* (see page 69).

After cleaning mode* has completed or if humidity control is not provided:
- Switch off the incubator and disconnect from mains.
- Remove any auxiliary equipment installed (for care instructions see the specific Instructions for Use of the equipment concerned).

Risk of burns on contact with the heater.
Allow Caleo® to cool down before stripping down further.

Remove the canopy.
1 Grasp the handles on the sides of the canopy with both hands.
2 Lift the canopy horizontally off its supports (pillar elements).

- Remove visible soiling with a disposable cloth and detergent.
- Wipe-disinfect the surfaces.
- After allowing the disinfectant time to take effect (see manufacturer's specifications), wipe the surface with a clean damp cloth and then rub dry.

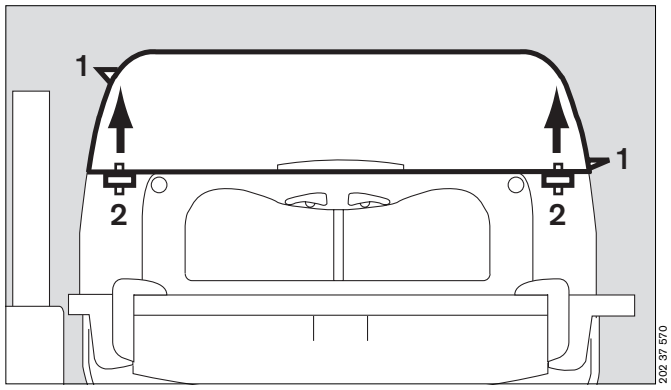

To remove the double wall:
- Remove the canopy and lay it upside down (on a soft, non-abrasive surface).
3 Squeeze the double wall inwards slightly, and
4 Release the oblong holes of the double wall from the retaining lugs in the canopy.
- Pull the double wall out of the canopy.

- Remove visible soiling with a disposable cloth and detergent.
- Wipe-disinfect the surfaces.
- After allowing the disinfectant time to take effect (see manufacturer's specifications), wipe the surface with a clean damp cloth and then rub dry.

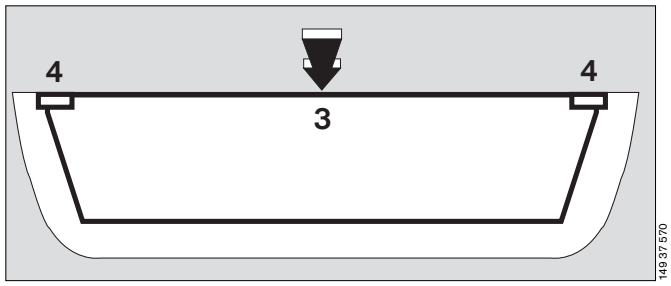

* Only available in combination with humidity control.

Open the front flap:

1 Turn the two locking knobs inwards as far as they will go and fold down the front flap.

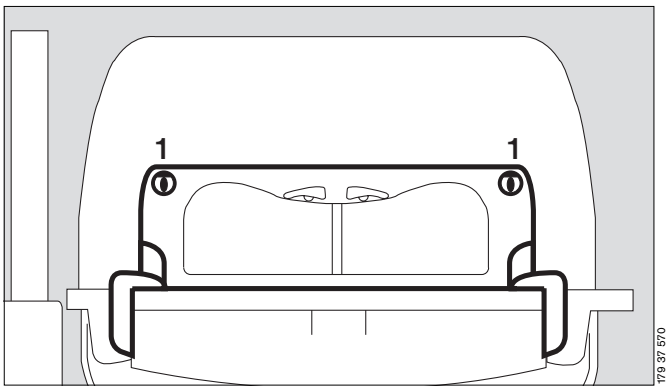

- Fold out the adjustable double walls to clean them.
- Open the side flaps in the same way.
- Remove visible soiling with a disposable cloth and detergent.
- Wipe-disinfect the surfaces.
- After allowing the disinfectant time to take effect (see manufacturer's specifications), wipe the surface with a clean damp cloth and then rub dry.

- Remove all through-hole grommets, sleeves and liners etc.
- Clean them at 93 °C in the cleaning and disinfecting machine*.

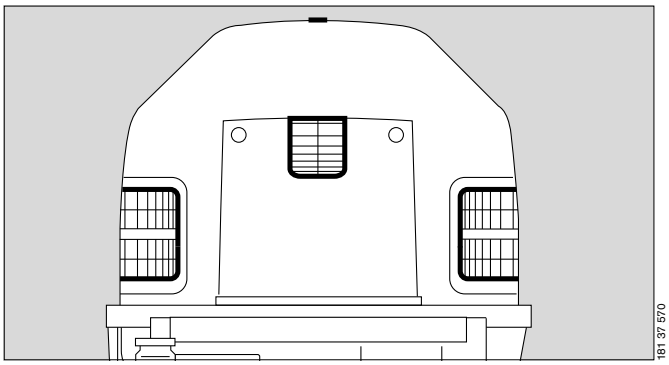

- Remove the mattress from the bed.

2 Remove the bed.
Take care not to damage the sensor unit.

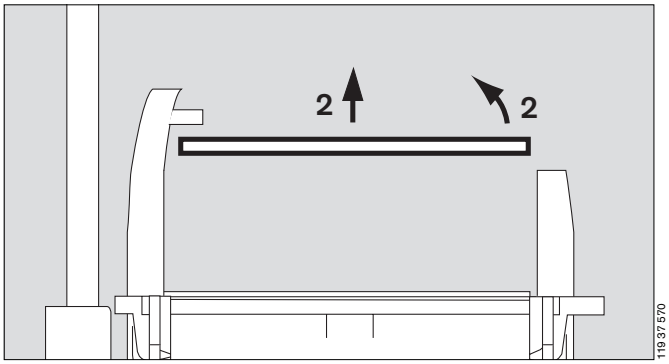

- Remove visible soiling with a disposable cloth and detergent.
- Wipe-disinfect the surfaces.
- After allowing the disinfectant time to take effect (see manufacturer's specifications), wipe the surface with a clean damp cloth and then rub dry.

Remove the X-ray drawer:

- Using the recessed handle, pull out the X-ray drawer as far as it will go.

3 Tilt the drawer upwards and pull it out of the unit.

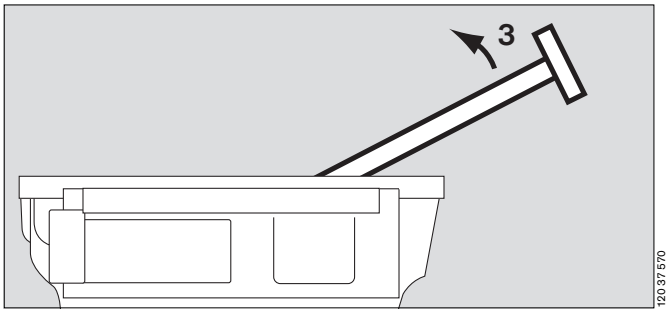

- Remove visible soiling with a disposable cloth and detergent.
- Wipe-disinfect the surfaces.
- After allowing the disinfectant time to take effect (see manufacturer's specifications), wipe the surface with a clean damp cloth and then rub dry.

---

* Observe national and international standards on cleaning, disinfecting and sterilisation procedures (e.g. EN 285, EN 554, EN 556).

Remove trough:

1 Press both catches inwards and pull the trough upwards.

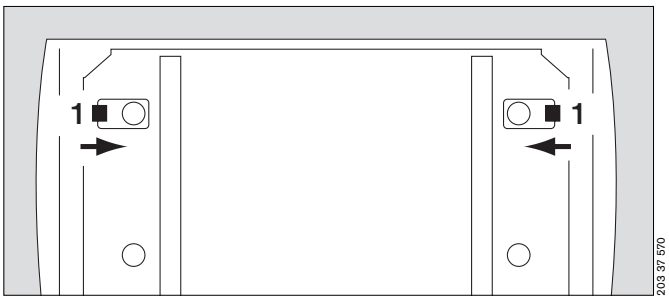

2 Lift out the trough.
3 Remove the fan impeller.

- Remove visible soiling with a disposable cloth and detergent.
- Wipe-disinfect the surfaces.
- After allowing the disinfectant time to take effect (see manufacturer's specifications), wipe the surface with a clean damp cloth and then rub dry.

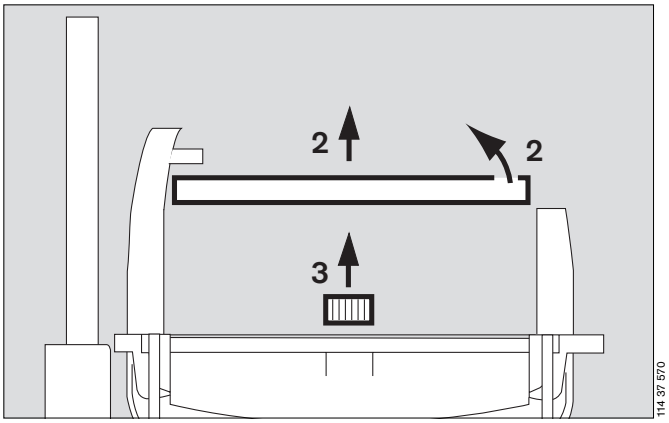

- Turn the trough over.

4 Lift the air guide plate to the side to disinfect and clean.

- Remove visible soiling with a disposable cloth and detergent.
- Wipe-disinfect the surfaces.
- After allowing the disinfectant time to take effect (see manufacturer's specifications), wipe the surface with a clean damp cloth and then rub dry.

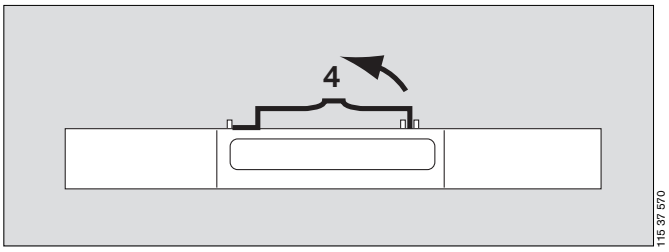

Base frame/body

- Remove visible soiling with a disposable cloth and detergent.
- Wipe-disinfect the surfaces.
- After allowing the disinfectant time to take effect (see manufacturer's specifications), wipe the surface with a clean damp cloth and then rub dry.
- Remove any impurities near the slits of the sensor unit.

Do not allow any moisture to enter the sensor.
Do not disinfect the sensor unit by immersion or spraying.

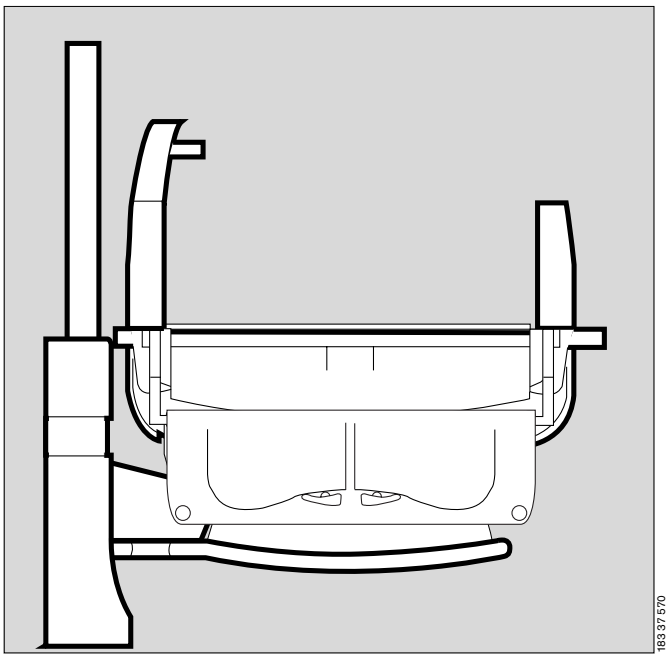

Control panel

- Pull off the turn-and-press rotary knob.

- Remove visible soiling with a disposable cloth and detergent.
- Wipe-disinfect the surfaces.
- After allowing the disinfectant time to take effect (see manufacturer's specifications), wipe the surface with a clean damp cloth and then rub dry.

Do not allow any moisture to enter the control panel.
Do not disinfect the control panel by immersion or spraying.

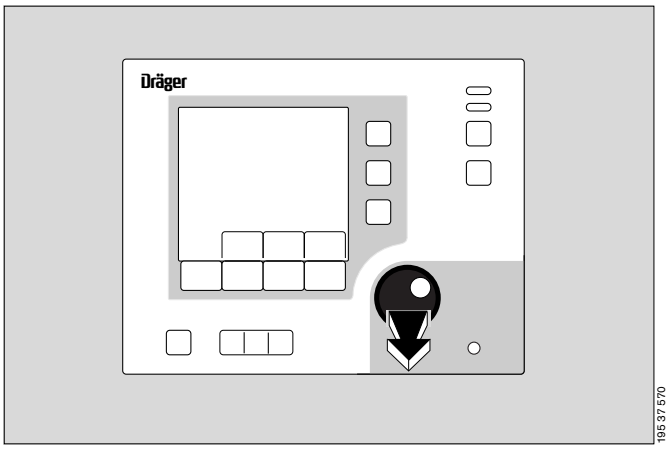

Use only the recommended cleaning agents and disinfectants. Otherwise, there is a risk of cracks forming in the transparent parts, e.g. due to the use of alcohol.

Do not use UV radiation on the incubator, because this treatment may cause cracks in the transparent components.

Before reusing for a patient

- Check that the system has been cleaned and disinfected in conformity with the regulations of the hospital.
- Reassemble the equipment with disinfected hands.
- Refit all equipment – see "Stripping down", page 86.

When inserting the trough, make sure that both holders click into place.

If the holders of the trough are damaged:
- Call DrägerService.

Fitting the water connection pipe:

1 Check the O-ring (2M 50 346) for damage and replace if necessary.
2 Check the locking valve for damage.

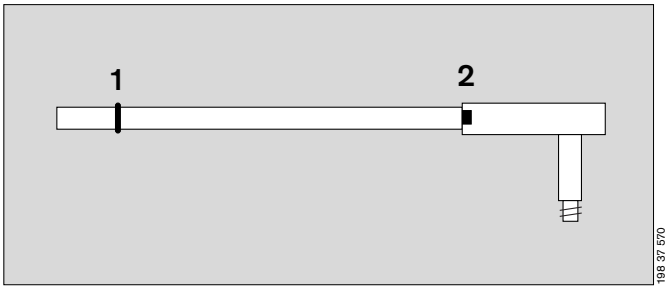

To make the water connection pipe easier to install, tilt the incubator.
- Connect the incubator to the mains power supply.
- Switch on the incubator = press the on/off switch until it clicks into position (see page 37).
- Tilt the bed (see page 23).

3 Push the water connection pipe into the guide duct, holding the LuerLock connection vertically at the top.

- After overcoming a spring force,

4 turn the water connection pipe counter-clockwise 90° and secure the locking valve in the holder.

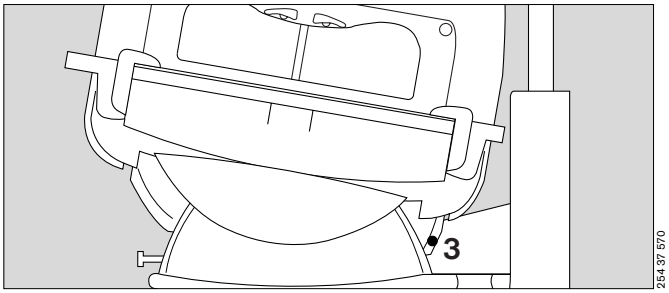

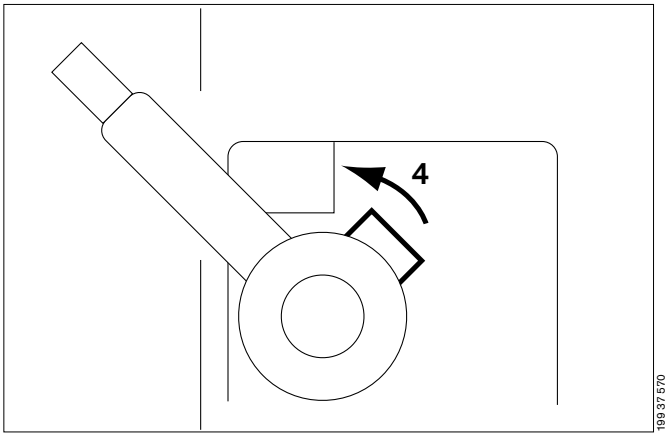

- Check that the incubator is ready for operation – see "Before each use" on page 26.

To remove possible disinfectant residue, it is recommend running the incubator in standby mode.

- Switch on Caleo® (see page 37).
- Activate air temperature control (see page 38).
- Run Caleo® at 37 °C with opened flaps.

If using a water container:
Do not refill the water container until just before placing the patient in the incubator (see page 24)!

If using a water bag:
Do not connect the water bag until just before placing the patient in the incubator (see page 24)!

Care list

What	How often	How		
		Disinfect and clean		Sterilise
Reusable components	Care intervals	Wipe[a]	Cleaning and disinfecting machine[b] 93 °C [c]	Steam 134 °C [c]
Connection tube	Replace weekly and with each change of patient			
Water container	Change of patient/weekly		yes	yes
Water connection pipe	Change of patient/weekly		yes	yes
Canopy	Change of patient/weekly	yes		
Double wall	Change of patient/weekly	yes		
Front flap	Change of patient/weekly	yes		
Side flap	Change of patient/weekly	yes		
Double walls	Change of patient/weekly	yes		
Through-hole sleeves etc.	Change of patient/weekly		yes	
Bed	Change of patient/weekly	yes		
Mattress	Change of patient/weekly	yes		
X-ray drawer	Change of patient/weekly	yes		
Trough	Change of patient/weekly	yes		
Air guide plate	Change of patient/weekly	yes		
Fan impeller	Change of patient/weekly	yes		
Base frame	Change of patient/weekly	yes		
Control panel	Change of patient/weekly	yes		
Rotary knob (control panel)	Change of patient/weekly	yes		
Fresh air filter[d]	Replace every 2 months			

a. Use surface disinfectants based on aldehydes and quaternary ammonium compounds.
b. Use only detergent.
Do not use disinfectants that release alkali or chlorine. Risk of corrosion!
c. Observe national and international standards on cleaning, disinfecting and sterilisation procedures (e.g. EN 285, EN 554, EN 556).
d. Use the original Caleo® air filter (MX 17 015) only! Risk of fire!

Maintenance intervals

Disinfect and clean the incubator or the relevant parts before each maintenance operation, even when returning the equipment for repair purposes!

Disconnect from the mains before each maintenance operation. Risk of electric shock.

	Intervals						Who?
	when necessary	**weekly**	**every 2 months**	**every 6 months**	**once a year**	**every two years**	
Replaceable parts:							
Fresh air filter			X[a]				Medical and technical personnel
Grommets, sleeves etc.	X[b]						Medical and technical personnel
O-ring, for water connection pipe	X						Medical and technical personnel
Fan motor						X[c]	Authorised technicians
Lithium battery						X	Authorised technicians
Skin temperature sensors		X[d]					Medical personnel
Adhesive pads		X[e]					Medical personnel
Mattress	X						Medical personnel
Maintenance:							
Device servicing and maintenance				X			Authorised technicians
Calibration:							
O_2 sensors					X		Authorised technicians
Scales	X[f]				X		Authorised technicians

a. Use the original Caleo® air filter (MX 17 015) only!
b. Replace if the material becomes brittle or sticky or if strips of material have become detached
c. Replace after 18000 – 20000 operating hours
d. At the latest when changing patient
e. At the latest when changing patient
f. Measuring accuracy depends on local geological and geographical conditions.
The specified accuracy is only applicable if the scales have been calibrated at the installation site.

Disposal

Disposal of the connection tube and fresh air filter

– with household waste.

Disposal of O_2 sensors and battery

– Do not throw into the fire. Risk of explosion.
– Do not force open: risk of chemical burns.
– Do not recharge the battery.

Special waste:

– Dispose of special waste in accordance with national waste disposal regulations.

Further information can be obtained from national and local environmental and legislative authorities and suitable waste disposal companies.

Disposal of incubator

At the end of its useful life.

– Dispose of the incubator in conformity with national waste disposal regulations.

or

– Hand the incubator over to a suitable waste disposal company for disposal.

Further information can be obtained from national and local environmental and legislative authorities.

All plastic components weighing more than 50 g must be marked with their material code in order to ensure environmentally sound disposal.

Troubleshooting – Error Messages

Contents

Troubleshooting – Error Messages 98

Troubleshooting – Faults 103

Troubleshooting – Error Messages

All error messages are displayed on the screen. They are listed in the table below in **alphabetical** order.
See also "Alarm description" on page 123.

Message	Cause	Remedy	Duration audible alarm muted
Adjust. inoperable Yellow alarm LED lights up on the control unit. Alarm sounded (1x).	Height adjustment defective. Motor tilt position defective. Servomotor drive defective.	Call Dräger Service.	15 min.
Air heater inoperable Measured value flashes on the screen. Red alarm LED on the control panel flashes. Central alarm indicator lights up.* Intermittent audible alarm is sounded (5x).	Air heater defective.	Call DrägerService.	1 min.
Air temp. deviation above 1.5 °C (see "Configuration" on page 71) Measured value flashes on screen. Yellow alarm LED on the control panel flashes. Central alarm indicator lights up.* Intermittent audible alarm is sounded (3x).	The specified tolerance limit for deviation from the set value has been exceeded by a value either above the maximum or below the minimum value.	Reduce/increase humidity. Close canopy, front flap and hand ports. Check the set value and the configuration (page 71).	15 min.
Air temp. sensor inoperable 3 flashing dashes on the screen. Central alarm indicator lights up.* Intermittent audible alarm is sounded (5x).	Air temperature sensors are defective.	Call DrägerService.	1 min.
Air temperature too high Measured value flashes on screen. Red alarm LED on the control panel flashes. Central alarm indicator lights up.* Intermittent audible alarm is sounded (5x).	Incubator temperature above 38 °C. Incubator temperature above 40 °C.	Remove external temperature sources. Call DrägerService.	5 min.
Calibrate scale before weighing	The scales are not calibrated.	Call DrägerService.	
Connect skin 1 sensor Three dashes flash on screen in place of the measured value. Red alarm LED on the control panel flashes. Central alarm indicator lights up.* Intermittent audible alarm is sounded (5x).	Probe for skin temperature (yellow) is not connected.	Check connection and correct if necessary.	5 min.
Device Error with number display. Continuous alarm tone, red alarm LED lights up.	Device fault.	Switch off device and then switch on again. Call Dräger Service.	

* The central alarm light can be switched off. See "Setting system parameters" on page 73.

Message	Cause	Remedy	Duration audible alarm muted
Fan inoperable Red alarm LED on the control panel flashes. Central alarm indicator lights up.* Intermittent audible alarm is sounded (5x).	Fan defective.	Check fan impeller. Call DrägerService.	5 min.
Goldcap accumulator fault Yellow alarm LED on control unit lights up. Audible alarm sounded (1x).	Goldcap rechargeable battery defective. Goldcap battery connection defective.	Call Dräger Service.	10 min.
Heater temp. sensor inoperable Red alarm LED on the control panel flashes. Central alarm indicator lights up.* Intermittent audible alarm is sounded (5x).	Air heater temperature sensors defective.	Call DrägerService.	1 min.
Humidifier inoperable Measured value (closed-loop humidity control) or set value (open-loop humidity control) flashes on the screen. Red alarm LED on the control panel flashes. Central alarm indicator lights up.* Intermittent audible alarm is sounded (5x).	Water heater is defective.	Switch off humidity module. Call DrägerService.	1 min.
Humidity deviation above 10 %	Canopy, front flap or hand ports are open. Sensor defective.	Wait for start-up phase. Set value <85 %. Close canopy, front flap or hand ports. Check water supply connection. Call DrägerService.	
Humidity sensor inoperable 3 flashing dashes on the screen. Red alarm LED on the control panel flashes. Central alarm indicator lights up.* Intermittent audible alarm is sounded (5x).	Humidity sensor is defective.	Switch off humidity control. Call DrägerService.	1 min.
Key pad locked Message displayed and yellow alarm LED lights up for 2 seconds on pressing a key.	Button functions (set value input/weighing/ menu button) disabled.	Activate push button functions (page 77).	-
Oxygen concentration below 18 %	O_2 concentration less than 18 Vol.%.	Check that the correct gas is connected. Call DrägerService.	1 min.

* The central alarm light can be switched off. See "Setting system parameters" on page 73.

Message	Cause	Remedy	Duration audible alarm muted
Oxygen deviation above 5 % (can be set between 3 and 5 % – see "Configuration" on page 71) Measured value flashes on screen. Red alarm LED on the control panel flashes. Central alarm indicator lights up.* Intermittent audible alarm is sounded (5x).	Difference in measured O_2 concentration is greater than 3 or 5 %. Values above 65 % O_2 have been set.	Close the canopy, front flap, X-ray drawer, hand ports and filter holder. Check O_2 connection. Check O_2 supply via central medical gas pipeline or O_2 cylinder. Check configuration (page 71). Reduce O_2 setting to 65 %. Call DrägerService.	2 min.
Oxygen module inoperable 3 flashing dashes on the screen. Red alarm LED on the control panel flashes. Central alarm indicator lights up.* Intermittent audible alarm is sounded (5x).	Controller of O_2 module is defective.	Switch off oxygen module. Call DrägerService.	1 min.
Oxygen sensor deviation above 3 % Measured value flashes on screen. Red alarm LED on the control panel flashes. Central alarm indicator lights up.* Intermittent audible alarm is sounded (5x).	Sensor 1 or sensor 2 is defective.	Switch off oxygen module. Call DrägerService.	1 min.
Oxygen sensor 1 inoperable 3 flashing dashes on the screen. Red alarm LED on the control panel flashes. Central alarm indicator lights up.* Intermittent audible alarm is sounded (5x)	Sensor for oxygen measurement is defective. Sensor 1 is defective.	Switch off oxygen module. Call DrägerService.	1 min.
Oxygen sensor 2 inoperable 3 flashing dashes on the screen. Red alarm LED on the control panel flashes. Central alarm indicator lights up.* Intermittent audible alarm is sounded (5x)	Sensor for oxygen measurement is defective. Sensor 2 is defective.	Switch off oxygen module. Call DrägerService.	1 min.
Oxygen valve fault Measured value flashes on screen. Yellow alarm LED flashes on control unit. Central alarm indicator lights up.* Intermittent audible alarm is sounded (3x).	O_2 valve defective.	Switch off O_2 module. Call Dräger Service.	1 min.
Scale inoperable 3 short alarm tones	The scales are defective.	Call DrägerService.	
Skin 1 less than 0.5 °C above skin 2 (see "Setting alarms" on page 74) The measured values for skin temperatures flash on-screen. Yellow alarm LED on the control panel flashes. Central alarm indicator lights up.* Intermittent audible alarm is sounded (3x).	Kangaroo mode alarm: temperature difference between the skin temperature (yellow) and peripheral temperature (white) too low.	Check patient's heat exchange. Check configuration (page 71).	15 min.

* The central alarm light can be switched off. See "Setting system parameters" on page 73.

Message	Cause	Remedy	Duration audible alarm muted
Skin 1 more than 4.0 °C above skin 2 (see "Setting alarms" on page 74) The measured values for skin temperatures flash on-screen. Yellow alarm LED on the control panel flashes. Central alarm indicator lights up.* Intermittent audible alarm is sounded (3x).	Kangaroo mode alarm: temperature difference between the skin temperature (yellow) and peripheral temperature (white) too high. Temperature sensor incorrectly attached to patient.	Check patient's heat exchange. Check configuration (page 71). Check that temperature sensor is correctly attached to the patient.	15 min.
Skin 1 sensor fault 3 flashing dashes on the screen. Red alarm LED on the control panel flashes. Central alarm indicator lights up.* Intermittent audible alarm is sounded (5x).	Sensor for core temperature is defective.	Replace sensor.	5 min.
Skin 1 temp. deviation above 0.5 °C (can be set between 0.3 and 1.0 °C – see "Configuration" on page 71) Measured value flashes on screen. Yellow alarm LED on the control panel flashes. Central alarm indicator lights up.* Intermittent audible alarm is sounded (3x).	The specified limit value for deviation from the set value has been exceeded.	Check that the sensor is correctly attached to the patient. Close the canopy, front flap or hand ports. Switch off external heat sources. Remove double walls. Change configuration (page 71).	5 min.
Skin 1 temperature above 39 °C Measured value on screen flashes. Red alarm LED on the control panel flashes. Central alarm indicator lights up.* Intermittent audible alarm is sounded (5x).	Peripheral temperature too high.	Check that sensor is correctly attached to the patient. Switch off external heat sources. Check whether double walls can be removed.	2 min.
Skin 1 temperature below 36.0 °C (see "Configuration" on page 71) Measured value on screen flashes. Yellow alarm LED on the control panel flashes. Central alarm indicator lights up.* Intermittent audible alarm is sounded (3x).	Kangaroo mode alarm: Skin temperature is falling below the alarm limit. Temperature sensor incorrectly attached to patient.	Increase heat supply to the patient. Check configuration. Check that temperature sensor is correctly attached to the patient.	15 min.
Skin 2 sensor fault 3 flashing dashes on the screen. Red alarm LED on the control panel flashes. Central alarm indicator lights up.* Intermittent audible alarm is sounded (5x)	Sensor for peripheral temperature measurement is defective.	Replace sensor.	5 min.
Skin 2 temperature above 39 °C Measured value on screen flashes. Red alarm LED on the control panel flashes. Central alarm indicator lights up.* Intermittent audible alarm is sounded (5x).	Peripheral temperature too high.	Check that sensor is correctly attached to the patient. Switch off external heat sources. Check whether double walls can be removed.	2 min.

* The central alarm light can be switched off. See "Setting system parameters" on page 73.

Message	Cause	Remedy	Duration audible alarm muted
Skin 2 temperature below 34.0 °C (see "Configuration" on page 71) Measured value on screen flashes. Yellow alarm LED on the control panel flashes. Central alarm indicator lights up.* Intermittent audible alarm is sounded (3x).	Kangaroo mode alarm: Peripheral temperature is falling below the alarm limit. Temperature sensor incorrectly attached to patient.	Increase heat supply to the patient. Check configuration. Check that temperature sensor is correctly attached to the patient.	15 min.
Water empty, please refill Measured value flashes on screen. Yellow alarm LED on the control panel flashes. Central alarm indicator lights up.* Intermittent audible alarm is sounded (3x).	Water container is empty. Air bubble in transfer set.	Refill water container. Replace infusion bottle. Remove air bubble from transfer set.	15 min.
Wrong oxygen sensor 1 Message on screen flashes. Red alarm LED on the control panel flashes. Central alarm indicator lights up.* Intermittent audible alarm is sounded (5x).	Wrong sensor in O_2 module. No measurement can be performed after replacing the oxygen sensor.	Call DrägerService. Switch off O_2 control.	1 min.
Wrong oxygen sensor 2 Message on screen flashes. Red alarm LED on the control panel flashes. Central alarm indicator lights up.* Intermittent audible alarm is sounded (5x).	Wrong sensor in O_2 module. No measurement can be performed after replacing the oxygen sensor.	Call DrägerService. Switch off O_2 control.	1 min.

* The central alarm light can be switched off. See "Setting system parameters" on page 73.

Troubleshooting – Faults

All faults are listed in the table below in **alphabetical** order. See also "Alarm description" on page 123.

Fault	Cause	Remedy
Base frame cannot be set to the tilted position.	Motor overheating.	Wait for at least 2 minutes. After this period, tilting is again possible for a few seconds (10 %). The full duty cycle is only available after a pause of 54 minutes.
	Motor defective.	Call DrägerService.
Height adjustment does not switch off.	Switch defective or loose contact. Motor defective.	Call DrägerService.
Height adjustment not possible.	Lifting motor overheating.	Wait for at least 2 minutes. After this period, height adjustment is again possible for a few seconds (10 %). The full duty cycle is only available after a pause of 54 minutes.
	Lifting motor defective.	Call DrägerService.
Red alarm LED on control panel is lit. Continuous audible alarm tone. Audible alarm cannot be muted.	Serious device fault.	Call DrägerService.
Red LED at symbol flashing, intermittent alarm tone is sounded.	Power failure alarm.	Check power supply. – Connect power supply to mains. Call DrägerService.
Short beep signal (3x) is sounded.	While setting a set value, the rotary knob is not pressed within 20 seconds.	Press rotary knob or cancel input.
The yellow LED in the alarm button is lit.	Alarm muting is active.	Deactivate alarm muting.

If the machine does not operate as expected please call DrägerService.

Technical Data

Contents

Technical Data 106

Environmental conditions 106
Operating data 106
Performance characteristics 107
Measurement and control parameters 107
Dimensions 109
Classification 110

Technical Data

Environmental conditions

In normal operation	
Temperature	20 °C to 35 °C
Atmospheric pressure	600 hPa to 1060 hPa
Relative humidity	10 to 95 %, no dew formation
During storage/transport	
Temperature	–20 °C to 60 °C
Atmospheric pressure	210 hPa to 1060 hPa
Relative humidity	10 to 95 %, no dew formation

Operating data

Electrical power supply	100 V / 110 V / 120 V / 127 V / 230 V to 240 V AC (please specify in your order) 50 Hz / 60 Hz
Max. power consumption at 100 V	10 A*
Max. power consumption at 110 V	9.2 A*
Max. power consumption at 120 V	8.7 A*
Max. power consumption at 127 V	9.1 A*
Max. power consumption at 230 V	5.5 A*
Max. power consumption at 240 V	5.6 A*
Leakage current 100 – 127 V / 50 Hz / 60 Hz	150 µA
Leakage current 230 – 240 V / 50 Hz	250 µA
Leakage current 230 – 240 V / 60 Hz	300 µA
Heater power	
Air heater	500 W
Water heater	140 W
Built-in socket strip	
Max. overall current consumption of all sockets at all power supply voltages	2 A

⚠ Max. leakage current:
By connecting devices to the socket strip the overall leakage current may be increased to an unacceptably high level. Where applicable, national limits must be observed. The operator is responsible for adhering to the specified maximum overall leakage current.

Europe (IEC / EN 60601-1):	
Permissible overall leakage current	500 µA
Max. leakage current of the socket strip	250 µA with 50 Hz power supply 200 µA with 60 Hz power supply
USA (UL 2601-1):	
Permissible overall leakage current	300 µA
Max. leakage current of the socket strip	150 µA
Height adjustment and tilting	
Duty cycle	10 %
Shut-off mode	6 minutes ON, 54 minutes pause
O_2 inlet pressure	min. 300 kPa, max. 500 kPa

* This value takes into account the current consumption of the built-in socket strip.

Performance characteristics

Warm-up time	20 minutes from 20 °C to 31 °C (at 20 °C ambient temperature)
Increase in O_2 concentration from 21 to 60 Vol.%	<10 min
Humidification	Heating of sterilised Aqua dest. or demineralised water
Air velocity over the bed	<8 cm / second
Fresh air supply	up to 30 L/min
CO_2 flush, conforming to IEC / EN 60 601-2-19 / 105.1	
Max. available CO_2 concentration in the incubator	<0.5 Vol.%
Bed tilting	infinitely variable up to 13° tilt angle on both sides
Operating noise inside the canopy	≤50 dB(A) at 50 Hz ≤50 dB(A) at 60 Hz
Particle filter	NaCl pass volume ≤6 %

Measurement and control parameters

The specified values depend on the environmental conditions.

Air temperature control	
Measuring principle	NTC, 2 x
Measuring range	13 °C to 42 °C
Measuring accuracy	±0.8 °C
Set value range	20 °C to 39 °C in 0.1 °C increments* <28 °C and >37 °C (extendable with confirmation)
Skin temperature control	
Measuring principle	NTC
Measuring range	13 °C to 43 °C
Measuring accuracy	±0.3 °C
Set value range	34 °C to 38 °C in 0.1 °C increments >37 °C (extendable with confirmation)
O_2 control	
Measuring principle	Electrochemical sensor (capillary)
Measuring range	18 Vol.% to 99 Vol.%
Measuring accuracy	±3 Vol.%
Influencing factors	Atmospheric humidity <1.5 %
Set value range	21 Vol.% to 75 Vol.% in 1 Vol.% increments >40 Vol.% (extendable with confirmation) With a gas pressure of 400 kPa, the actual values are between 65 and 77 vol.%.

* The set value must be at least 3 °C above the ambient temperature. At lower ambient temperatures, the increased heat loss may prevent high set values (39 °C) being fully attained. Use the double wall.

Relative humidity control

Measuring principle	Capacitive
Measuring range	10 % r.h. to 99 % r.h.
Measuring accuracy	±10 %
Set value range	30 % r.h. to 99 % r.h. in increments of 1 %*

Weighing scale

Measuring range	0 kg to 10 kg
Measuring accuracy**	±2 g (0 kg to 2 kg) ±5 g (2 kg to 10 kg)
Resolution	1 g

BabyLink interface (optional)

2 serial interfaces for the output of incubator status data (actual values, set values and alarms).
All signals are electrically isolated from the patient.
Dielectric strength 1500 V

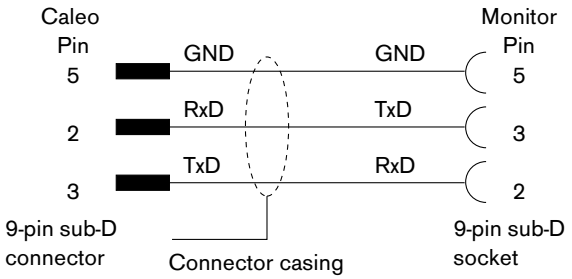

087 37 571

Central alarm (optional)

Output for connection to in-house P.A. systems (nurse call)

Operating voltage	max. 24 V
Current	max. 250 mA
Power	max. 3 W

Potential-free changeover contact

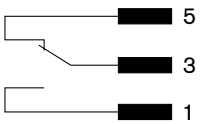

243 37 570

* The maximum attainable humidity depends on the air temperature and relative humidity. At high air temperature or low relative humidity, the humidity attainable in the Caleo® is reduced.

** The measuring accuracy depends on the geological and geographical conditions at the installation site. Calibration before delivery is not sufficient to guarantee the specified accuracy in some regions. On-site calibration is recommended in such cases.

Dimensions

Unit (Width x Depth)	1167 mm x 687 mm
Height of overall unit with variable pillar	1220 mm to 1520 mm
Height of overall unit with fixed pillar	1270 mm / 1370 mm / 1470 mm
Height of mattress surface (variable height)	800 mm to 1100 mm
Height of mattress surface (fixed height)	Optionally 875 mm, 950 mm or 1050 mm
Bed (width x depth)	645 mm x 500 mm

Weight

Overall weight	
max.	230 kg
basic equipment	130 kg
Total load	66 kg

Overview of max. loads

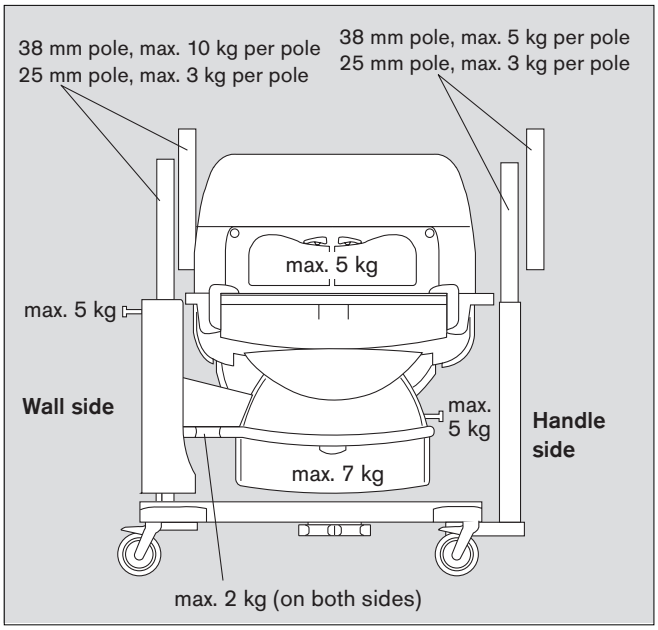

or alternatively
with installed monitor support tray (2M 50 085)

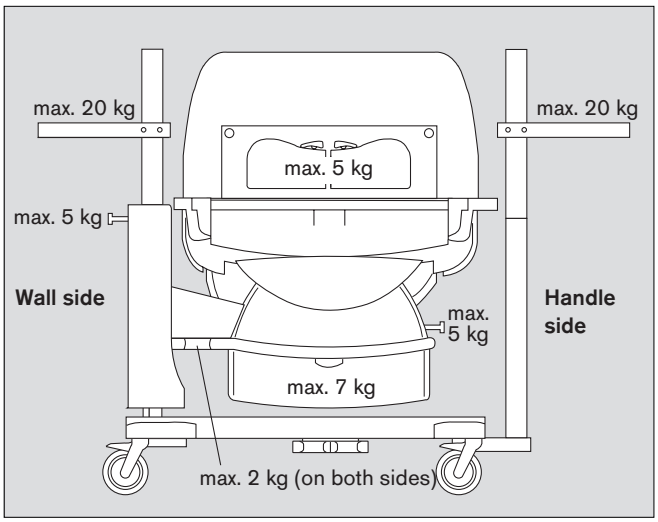

Classification

according to EC Directive 93/42/EEC Appendix IX	Class IIb
Classification of the accessories described:	
Conforming to EC Directive 93/42/EEC Appendix IX	Class I
UMDNS Code Universal Medical Device Nomenclature System	12-113
Standards	Device conforms to IEC / EN 60601-1, IEC / EN 60601–2-19
Enclosure protection class	I
Electromagnetic compatibility	tested to IEC / EN 60601-1-2 and IEC / EN 60601-2-19 (36.202.2.1) 10 V/m
Skin temperature sensor	Type BF

Description

Contents

Description 112

Operating principle 112
Accessibility 112
Bed and mattress 113
Twins in the Caleo® (Caleo® Twincubator™) 113
X-rays 113
Weighing scale 114
Airflow Routing 115
Air temperature control 115
Skin temperature measurement 116
ThermoMonitoring™ 116
Skin temperature control 117
Kangaroo Mode 118
O_2 enrichment 120
Closed-loop humidity control 121
Cleaning Mode 122
Safety systems 122
Alarm description 123
Key to the symbols used 124
Labelling 125

Order list 128

Parts List 131

Description

Operating principle

Caleo® is an incubator for premature children and sick neonates up to a body weight of 5 kg and a body length of 55 cm. Inside the Caleo® patient "capsule", the patients are supplied with a controlled amount of heat and, if necessary, humidity* and oxygen*. The user/operator can adapt the incubator climate to suit the needs of the patient, by adjusting the air temperature, relative humidity* and oxygen content*. The patient capsule acts as a specially protected zone for the patient. The ambient air is therefore filtered before it enters the interior.

Accessibility

Caleo® provides excellent accessibility to the patient for all normal and intensive care requirements: for this purpose, the four hand ports (two on each longitudinal side) are designed with especially large dimensions (Caleo® JumboPorts™). The two longitudinal sides can be completely folded down. In addition, two smaller side flaps at the head and foot ends of the patient can be folded down. If necessary, the canopy cover can also be propped up from two different sides or can be fully removed in an emergency – in order to provide free accessibility to the patient from above.

A total of ten generously dimensioned hose through-hole sleeves ensure clear organisation and routing of hoses and cables through the incubator. Each corner has two such sleeves, which can be easily removed, especially during "Kangarooing" (where the patient rests in direct contact on the mother's or father's chest), to ensure clearly manageable cable and hose routing even when the patient is outside the patient capsule. Two other large tubing ports are located in the side flaps at the head and foot end. In addition, the canopy cover contains an aperture, e.g. for feeding the patient.

* optional equipment feature

Bed and mattress

The bed is especially large in order to provide sufficient space for the patient under a variety of conditions – such as hose installation, the use of supports and storage aids, the treatment of twins in a single incubator and turning over the patient, e.g. for reintubation in the incubator.
To prevent decubitus, an extra-soft mattress is used (SoftBed® Caleo®*).
The bed can be pulled out when the front flap is open. It can be electrically tilted in order to obtain either a head-up position (Trendelenburg position) or head-down positon (±13°).

Twins in the Caleo® (Caleo® Twincubator™)

Twins can be placed together in Caleo® if there are no medical objections and if their total combined weight does not exceed 5 kg. When treating twins in an incubator, Caleo® must be operated in air control mode.
The treatment of twins together in a single incubator can help to prevent post-natal separation trauma. Direct skin contact between the twins can have positive effects on the development of the patient, as is the case with "Kangaroo" mode (see page 118). If necessary, the incubator air temperature may have to be reduced, because the patients mutually warm each other by direct contact and would therefore risk overheating.

During operation in air temperature mode, the skin temperature of the first patient can be monitored with the yellow temperature sensor, whilst the second temperature channel (white probe) can be used to monitor the skin temperature of the second patient.

Possible dangers from the treatment of twins in a single incubator are derived, e.g. in the case of infections, from the risk of contagion or confusion between the two patients when administering medicines or foods. Also, if the twins require different ambient temperatures or an ambient air with different oxygen or humidity saturation, they should be placed in two separate incubators.

X-rays

With the X-ray drawer, which is accessible from outside, the patient can be X-rayed in the incubator without having to be removed or lifted. The X-ray drawer can be pulled out without having to open the Caleo® front flap. Unnecessary disturbance of the patient is therefore avoided. A grid is provided on the X-ray drawer to help align the X-ray cassette.

---

* see Caleo® Accessories range.

Weighing scale*

With the optionally fully integrated incubator weighing scale, the weight of the patient can be determined without having to remove the patient from the protective climate of the incubator. Even with the built-in scales, the use of the X-ray drawer remains possible. To weigh, the patient must be lifted once in order to reset the scales to a zero point. The patient can then be placed back on the mattress. The current and previous weight are displayed for information. The results of the last 30 weighs can be graphically represented in the trend display.

Weighing without lifting the patient again (i.e. without new tare) is possible. This option is useful when the weight has to be taken again for checking purposes shortly after the first weigh, or if e.g. the weight with full and empty nappies has to be determined. The entire weighing procedure is accompanied by short audible signals, so that the operator's full attention can be paid to the patient.

When weighing the patient inside an incubator, take care to ensure that no hoses or cables cramp the bed or can distort the weight measurement. If possible, all hoses or cables should be lifted together with the patient. When the patient is placed back on the mattress, the hoses and cables should still be held slightly raised until the new weight appears on the screen (to ensure that the weight of the hoses and cables is not also weighed during the weighing procedure).

The weighing scale in the Caleo® comprises four weighing elements located underneath the bed, an electronic measuring and analysis unit and a special page on the control monitor. In normal mode, the entire bed rests on these four weighing elements under the bed. A safety system prevents the weighing elements being damaged if loads of more than 10 kg are applied. When removing the bed, it should be raised slightly by turning two fixing knobs so that it can then be pulled out smoothly.

* optional equipment feature

Airflow Routing

The heated and humidified air flows into the canopy from both sides. It is guided up the inside of the front flap, along the canopy cover and then down the two transverse sides by suction. The air from the interior is mixed with fresh ambient air by an air filter and is circulated by a fan impeller. Along this path, the air is channelled past an electrically powered heater and is humidified if necessary*.
The patient lies in a calm zone with low airflow speeds. Heat loss due to flow is kept to a minimum. On opening the large flaps or hand ports (Caleo® JumboPorts™), an efficient hot air curtain is formed to prevent cooling of the patient capsule.

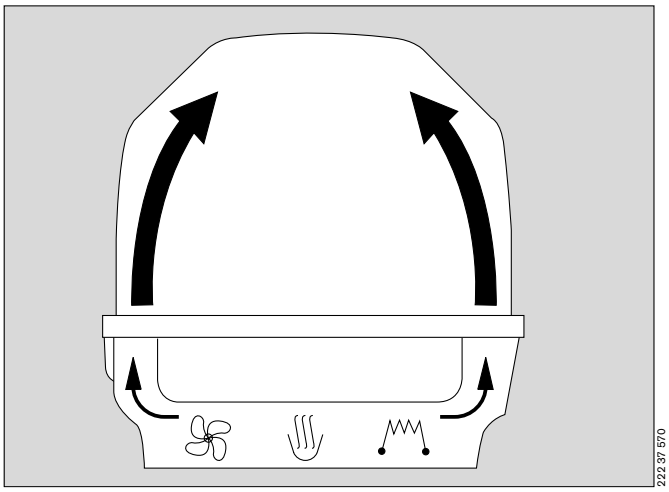

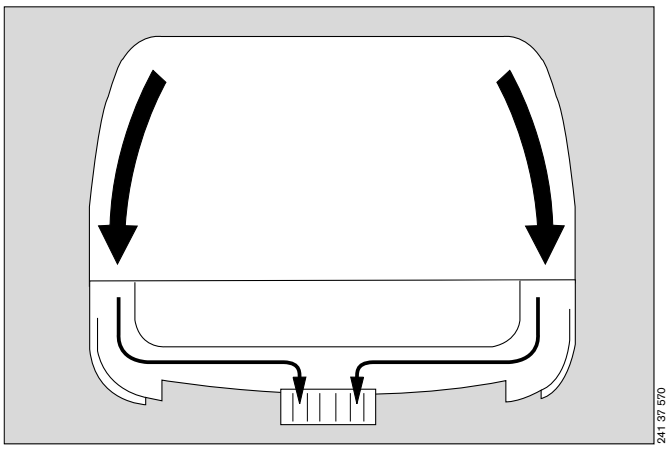

Air temperature control

The user sets the desired air temperature in the patient capsule by means of the control panel (set value for air temperature in air temperature mode).
The current air temperature is measured by the air temperature sensor in the patient capsule (at the patient's head end of the incubator) and is then compared to the set value. If the set value is greater than the actual measured air temperature, the heater receives the signal to apply more heat. The air temperature inside Caleo® therefore increases.
If the set value is lower than the actual measured air temperature, the heater receives the signal to apply less heat. The air temperature inside Caleo® drops.
If the current air temperature deviates from the set value by more than ±1.5 °C** an alarm is triggered.
The audible signal of this alarm can be muted by the user.
As soon as the deviation in the measured air temperature is within ±1.5 °C** of the set value (see above), the alarm is cancelled.

---

* optional equipment feature
** other configurations possible

Caleo® temperature control characteristics

The desired temperature increase is achieved rapidly due to the high heating power. A temperature reduction takes longer, due to the good thermal insulation of the incubator.

Note on setting the air temperature set value in the Caleo®:

The patient has limited
- heat loss due to airflow, because the airflow rate above the mattress is low.
- heat loss through the mattress, because the mattress is well insulated.
- heat loss due to evaporation, provided that humidity* is set relatively high (greater than 60 %).
- heat loss due to radiation, provided that the double wall** is installed.

Skin temperature measurement

Two skin temperature sensors can be connected to measure the skin temperature (yellow skin temperature sensor) and peripheral temperature (white skin temperature sensor). The measured value of the yellow skin temperature sensor is used to regulate the incubator heater in "skin temperature control mode".

ThermoMonitoring™

The term ThermoMonitoring™ refers to the continuous measurement and display of a central temperature and a peripheral temperature. Instead of the central temperature, a near-core skin temperature can be used, as is the case e.g. during skin temperature control at the incubator.

The continuous display of the difference between these two temperatures permits early detection of the occurrence of cold stress. Heat stress, thermoregulation problems and e.g. infections can also be more rapidly detected by displaying the two temperature values and evaluating their difference.

Consequently, Caleo® provides the possibility of switching between a standard screen with large numeric digits and a trend screen showing the trend graph of a maximum of two temperatures. In this way, the difference between near-core skin temperature and peripheral temperature required by ThermoMonitoring™ can be displayed continuously.

In addition, by means of trend analysis, values from the past can be called up for subsequent explanation, e.g. the onset of sickness symptoms or the development of hypothermal stress.

---

* optional equipment feature
** see Caleo® Accessories range

Values going back a maximum of seven days in the past can be accessed. In addition, the desired time window can be set (between 3 hours and seven days).

With the "Trend Main Page" option selected from the main menu, the user can preconfigure which trend to display when switching over between numerical display and trend display.

In addition to displaying the two skin temperatures, the display can show the following parameters: air temperature, humidity*, oxygen* and the weight*, with a memory of up to 30 weight readings.

Skin temperature control

Caleo® is operated in skin temperature mode, this mode can be set on the control unit. At least the yellow skin temperature sensor (skin 1) must be plugged in and correctly attached to the patient. The user sets the set value for the skin temperature on the control panel. The actual skin temperature of the patient is measured by the yellow skin temperature sensor (skin 1) and compared with the set value.

The difference between the set value and the measured actual value is used to control the air temperature in Caleo® between a minimum of 20 °C and a maximum of 39 °C.
If the set value is greater than the currently measured skin temperature (skin too cold), the heater receives a signal to supply more heat. The air temperature in Caleo® rises, thereby also increasing the skin temperature of the patient.
If the set value is lower than the actual measured air temperature (skin too hot), the heater receives a signal to apply less heat. The air temperature inside Caleo® drops, thereby also reducing the skin temperature of the patient.

The longer the deviation between the set value and the actual measured value persists, the more powerfully heat is supplied by the heater (if the skin is too cold) or the more the air temperature in Caleo® is reduced (if the skin is too hot).

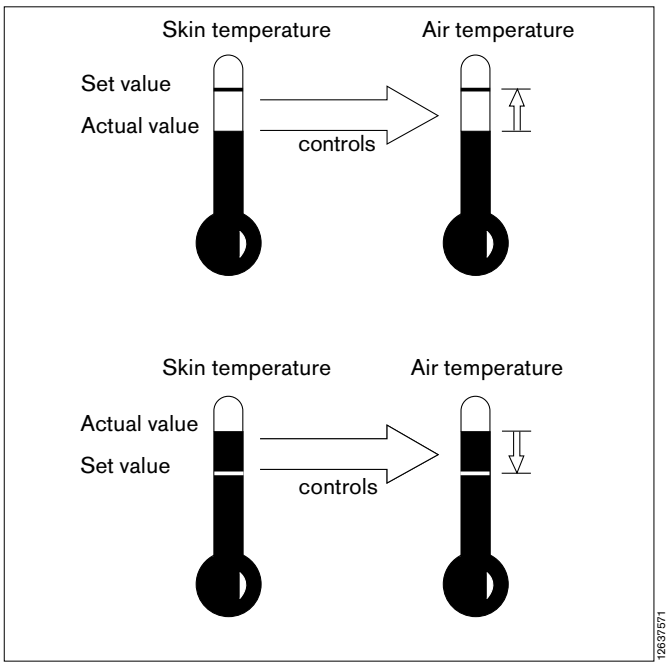

Waiting for the controller to settle.

The patient's skin temperature varies frequently, e.g. due to food intake or medical care. Deviations of a few tenths of a degree are normal.
Therefore:
Only change the set value of the skin temperature if the core temperature needs to be changed.
If the actual temperature deviates from the set skin temperature by more than ±0.5 °C**, an alarm is sounded. This audible alarm can be muted by the user. As soon as the measured value deviates from the set value by less than ±0.5 °C** (see above), the alarm is deactivated again.

* optional equipment feature
** other configurations possible

Kangaroo Mode

Kangaroo mode (Caleo® KangarooMode™) simplifies the operation of the incubator when the baby is removed to have direct skin contact with the mother or father ("Kangarooing"). This mode provides the user with extended monitoring functions in order to detect overheating and overcooling of the patient even when the patient is outside the patient capsule.

Other Caleo® features designed to ensure easier removal of the patient from Caleo® for "Kangarooing":
- the removable tubing grommets (sleeves) in the corners of the incubator,
- the facility to lower the patient's bed by up to 80 cm (with the variable "height adjustment" option)
- the minimal space requirement of the fold-down front flap of the Caleo®.

The incubator is switched over to Kangaroo mode on the control panel after pressing the "Menu" button. Once Kangaroo mode is activated, the following functions are automatically activated:

- **Switchover to "Standby" mode**

Since the baby is no longer inside Caleo® during "Kangarooing", the baby's skin temperature should no longer be used as a measure for controlling the air temperature inside the incubator. Instead, the incubator should be set up so that after terminating "Kangarooing" and putting the patient back inside Caleo®, the incubator should already be heated to the same temperature and climate as when the baby was taken out of the incubator. Consequently, during "Standby" mode, the following logic is applied:
If Caleo® was previously operated in skin temperature mode, it is switched over to air temperature mode for the duration of Kangaroo mode. The set value for the air temperature is automatically set to the average air temperature over the last three minutes. The previous set value for the skin temperature is stored in buffer memory.
If Caleo® was previously operated in air temperature mode, the setting remains unchanged.

- **Automatic alarm muting**

Since, generally, after switching over to Kangaroo mode the user opens the flap and takes the baby out of the incubator, alarms triggered by opening the flaps are no longer meaningful. Consequently, all alarms that would normally be activated by opening the large flaps are automatically muted for the next 4 minutes. The following alarms are involved:
- Air temperature deviation
- Oxygen deviation

- **Activation of special Kangaroo mode alarms**

During Kangarooing, the skin (and core) temperature of the patient is frequently found to rise. However, in some cases, the patient is cooled. Consequently, the core or skin temperature patient must be regularly monitored. In order to perform this monitoring with as little nuisance as possible to mother/father and baby, Caleo® provides the facility for activating special Kangaroo mode alarms during operation in Kangaroo mode. These alarms are set in the configuration. The following alarm limits are set:

– Lower alarm limit for the skin temperature (skin 1; T1) = Skin T1 min
– Lower alarm limit for the peripheral temperature (skin 2; T2) = Skin T2 min
– Lower alarm limit for the difference between T1 and T2 = Δ T min
– Upper alarm limit for the difference between T1 and T2 = Δ T max

These Kangaroo alarms have the following significance:

Skin T1 min:
The alarm is triggered as soon as the skin temperature (T1, yellow skin temperature sensor) falls below the set value.

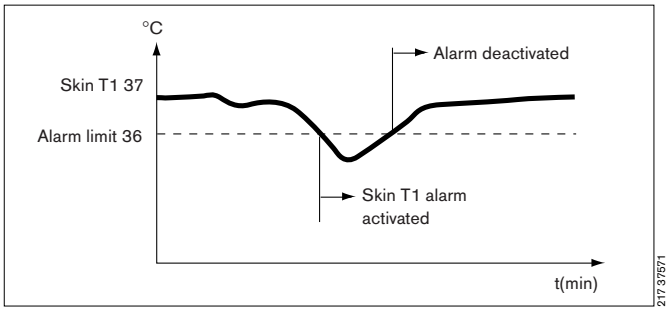

Skin T2 min:
The Skin T2 min alarm is triggered as soon as the peripheral temperature (T2, white temperature sensor) falls below the set value.

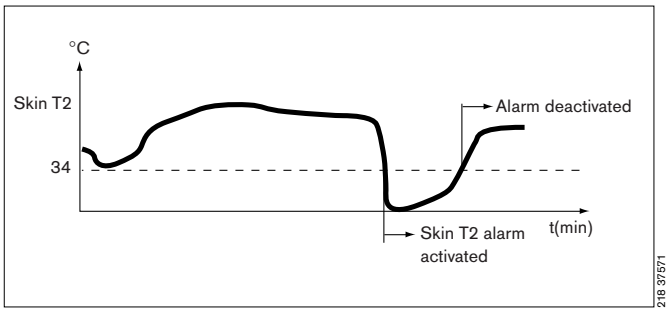

ΔT min:
This alarm is triggered if the difference between Skin T1 and Skin T2 is less than the set value (risk of hyperthermia).

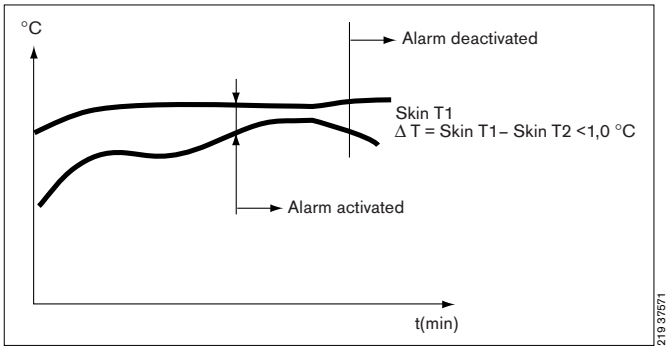

ΔT max:
This alarm is triggered if the difference between Skin T1 and Skin T2 is above the set value (risk of hypothermia).

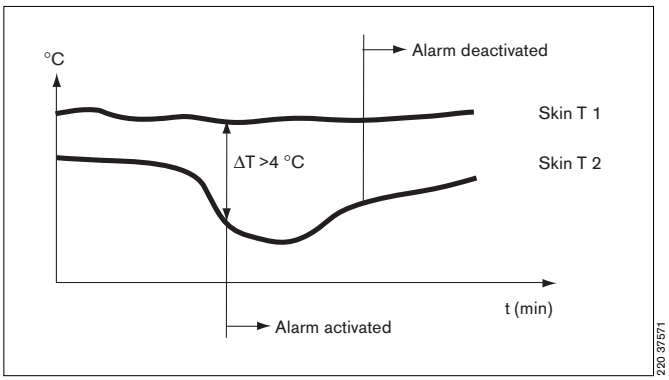

Each of these alarms can either be set or switched in advance to "OFF".
However, immediately after switching over to Kangaroo mode, automatic alarm muting is activated for the first four minutes, including for all special Kangaroo alarms, in order to give the patient time to adapt to the new environment.

O_2 enrichment

When adjusting the oxygen concentration in the patient capsule, the additional oxygen supply is metered by a microprocessor-controlled valve.
The oxygen is thereby channelled into the air routing system, so that it is heated and humidified with the air.

Closed-loop humidity control*

Caleo® provides the possibility for hygienic humidification of the incubator air. In this system, water is supplied from a separate water container (water bag or water tank) and heated. With closed-loop humidity control, the desired relative humidity is set, and Caleo® then automatically regulates the evaporator output of the humidifier.
Caleo® can control the humidity in two ways:

- By manual input of the desired relative humidity
  or
- Automatic humidity control (AUTO humidity)

Manual humidity control

A value between 30 % and 99 % relative humidity can be set. The actual humidity concentration is measured by the humidity sensor in the patient capsule (integrated in the sensor module at the patient's head end of the capsule).
If the set value is higher than the actual measured relative humidity (air too dry), the humidifier receives a signal to allow more water vapour into the patient capsule. The relative humidity inside Caleo® therefore rises.
If the set value is lower than the actual measured relative humidity (air too humid), the humidifier receives a signal to allow less water vapour into the patient capsule.
The relative humidity inside Caleo® therefore falls.

AUTO humidity

When AUTO mode is set, the set value for the relative humidity is calculated and set automatically by the system as a function of the air temperature (see graph).
This function is based on the observation that small and relatively immature patients require both a higher air temperature and higher relative humidity than larger patients. Consequently, in AUTO mode, the set value for relative humidity is calculated and set as a function of the air temperature. The lower the air temperature setting, the lower the set value for relative humidity.

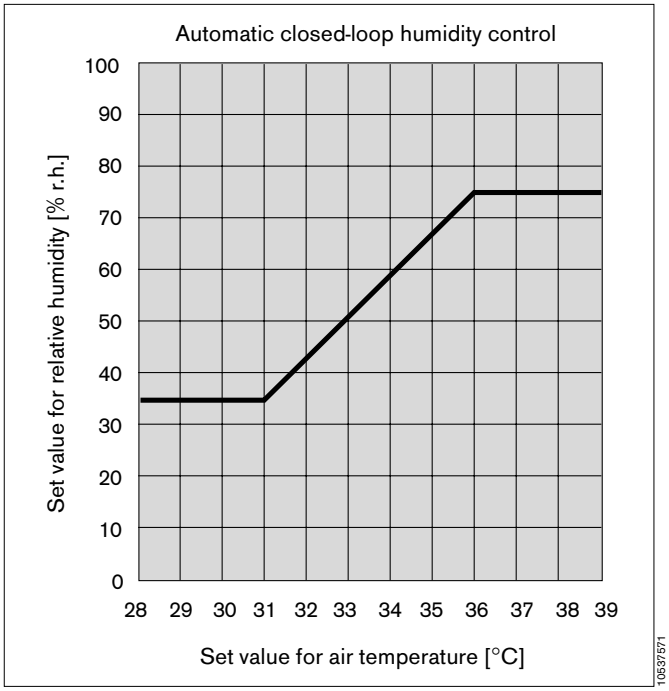

* optional equipment feature

Cleaning Mode*

Cleaning mode is only available if Caleo® is equipped with humidity control.
Cleaning mode (Caleo® CleanSwitch™) simplifies the task of cleaning Caleo® and must be used after ending operation of Caleo® (see page 69), after the water supply has bee disconnected and the water supply connection pipe has been removed (see page 87).

Cleaning mode may only be used if Caleo® is empty.

Cleaning mode is activated on the control panel after pressing the "Menu" button and selecting the "Cleaning Mode" option.

In Cleaning mode, the water heater is made to run dry. For this purpose, the humidifier is heated to above 100 °C, so that all remaining water in the humidifier is evaporated. After the residual water has been evaporated, the temperature in the humidifier is maintained at a temperature higher than 100 °C for approximately 10 minutes longer. Then the humidifier is allowed to cool down.
When there is no longer any danger of burns for the user, a message is displayed on the screen to inform the user that Cleaning Mode is complete and that the incubator can be dismantled for disinfecting and cleaning (see "After completing cleaning mode" on page 88).

Safety systems

After switching on the incubator, a self-test is performed to test all memory addresses of the microprocessor control system and the fault-free running of the program segments.
The functions of the control elements and feedback messages are tested by switching on and off. This test is also performed at ten-minute intervals during operation. In this test, all modules installed in the incubator are tested. Any error message will be displayed even when the defective module is switched off.
Any unauthorised operating state will cause Caleo® to switch off the heater or water heater as a safety precaution.
An additional temperature sensor in the hot air duct restricts the heat output in cases were the control loop would otherwise operate the heater at full power for a long period. Typical situations include e.g. flaps opened for a long period, high set values (39 °C) at low ambient temperatures (<22 °C) or a partly covered hot air duct.
This safety system considerably reduces the risk of burns caused by excessive heating of the surfaces next to the air outlet or by the hot air stream itself.

* optional equipment feature

Alarm description

Visual signals on the control panel

1 Red alarm LED
2 Yellow alarm LED
3 Red LED next to the symbol

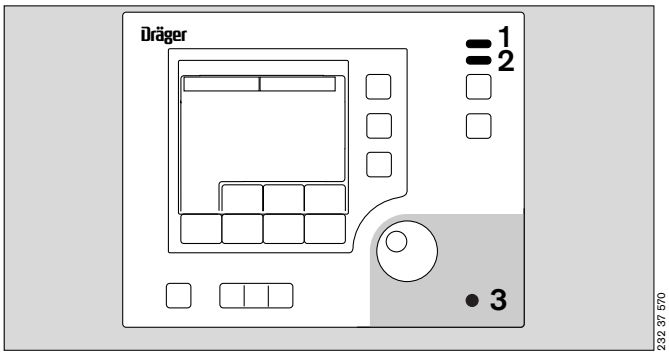

Caleo® distinguishes between 4 different alarm priorities:

Serious device faults

Device fault:
- Continuous tone that cannot be muted, and
1 the red alarm LED lights up.

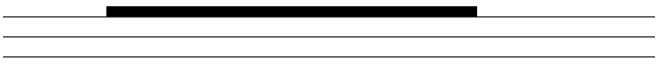

Power failure:
- Intermittent alarm tone that cannot be muted, and
3 the red alarm LED next to the symbol lights up.

Warning (highest danger level)
- Alarm tone sequence (5 beeps), which can be muted,
1 Red alarm LED flashes,
- Central alarm indicator lights up* and
- Measured value flashes.

For example:
– Skin 1 temperature above 39 °C

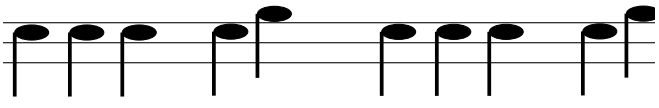

Caution (medium danger level)
- Alarm tone sequence (3 beeps), which can be muted,
2 Yellow alarm LED flashes,
- Central alarm indicator lights up and
- Measured value flashes.

For example:
– Air temp. deviation above 1.5 °C

Advisory (low danger potential)
- Alarm tone (1x), which can be cancelled.
2 Yellow alarm LED lights up.

For example:
– Adjust. inoperable

* The central alarm light can be switched off.
See "Setting system parameters" on page 73.

Information

No alarm LED lit, no audible alarm.
For example:
– Humidity deviation above 10%

Information messages on the active alarm are displayed on screen.

If another alarm occurs while the alarm tone is muted, the alarm tone will be reactivated.
See "Alarm suppression" on page 77.

Central alarm indicator

1 The central alarm indicator lights up when an alarm occurs.

1 The central alarm indicator does **not** light up with an alarm if
– the alarm muting button is pressed, or
– the central alarm indicator has been deactivated in the Configuration. See "Setting system parameters" on page 73.

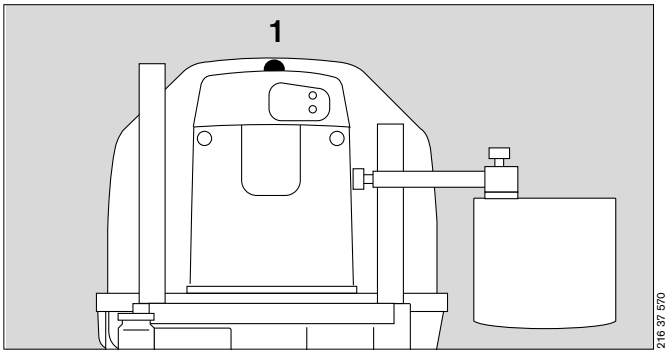

Key to the symbols used

Alarm muting

Cancel, stop setting procedure

Weighing scale

Bed tilt

Bed can be pulled out

Radioscopy, X-ray drawer can be removed

Caution: please note special information on this function in the Instructions for Use.

Type BF

Information

Please wait. Function will be activated shortly.

Disable keypad

Waiting for input from rotary control

Labelling

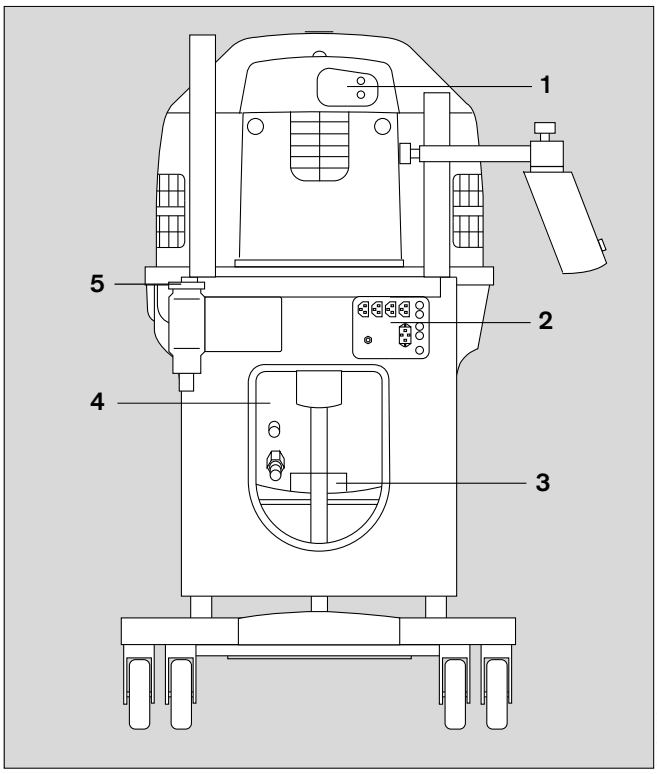

1

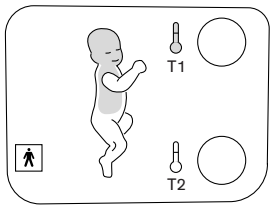

Connections for skin temperature sensors, page 42

2

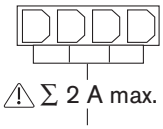

Auxiliary power sockets, page 25, Technical Data, page 106

T 2 H 250V IEC127-2/V

Type designation for fuses for auxiliary power sockets

M10A UL 198G

Type designation for system fuses

Equipotential bonding

On/off switch, page 26

Nameplate

3

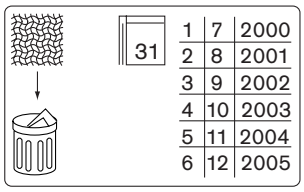

page 86

Use the original Caleo air filter only!
⚠ Risk of fire!

4

300 kPa min.
500 kPa max.
O_2

page 17

5

⚠ Aquadest

page 24

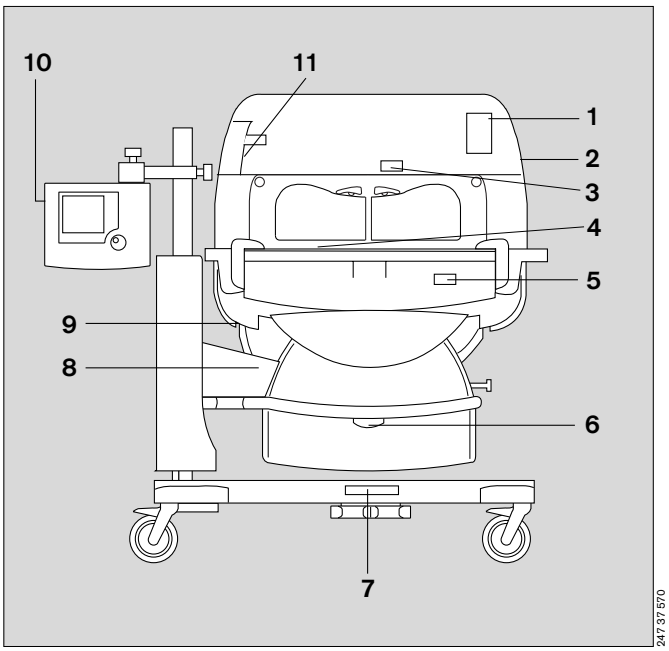

1	Never leave baby unattended when doors are open !	page 26
2	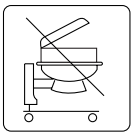	Do not tilt canopy forwards, page 27
3	⚠ WARNING! Never block or obstruct air vents! Risk of burning!	page 9 and page 115
4	Always close X-ray tray tightly !	page 21
5	max 5 kg, 11lbs	page 109
6	max 7 kg, 14lbs	page 109
7	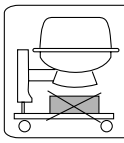 Use max. 6 min. within 60 min.	Do not place any objects on the base plate, page 22
8	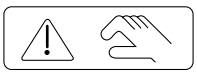	page 23
9	⚠ Aquadest	page 24
10	Batt.: VARTA Lithium 3V CR 2NP	Internal battery, page 95
	⚠ ⚠ Baby Link ⚠ RS232	Interface connections, page 108
11	No spray disinfection! Wipe disinfection only!	page 94
(inside)	Switch off device and allow heater to cool down for 90 min. before touching the surface!	page 36 page 88

1

Castor without brake function, page 22

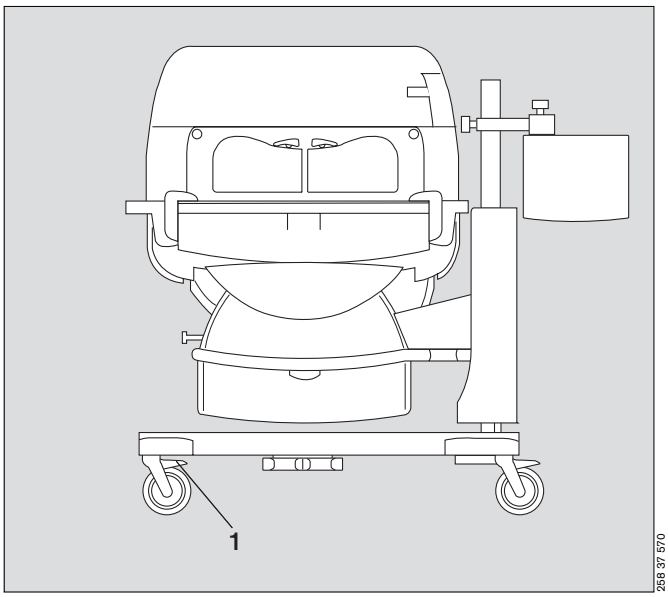

Order list

Designation and description	Part No.
Caleo®	2M 50 555 /
Caleo incubator with air and skin servo modes, ThermoMonitoring™ (temperature probes optional) With large front and rear access panels, 6 extra large hand ports (Jumbo Ports™), detachable hood which opens to either side, electronic bed inclination (±13°); 10 extra large tubing ports, integrated X-ray tray, integrated mains distribution box (4 sockets), large graphic EL display with Dräger rotary knob, trend display and large numerical display, central alarm light.	2M 50 000
Options	
Trolley with fixed height	Feature
Trolley with variable height	Feature
Standard humidity	Feature
O_2 control	Feature
Double wall	Feature
Bed scales, integrated	Feature
Drawer	Feature
Interface (2x RS232, 1x nurse call)	Feature
Accessories for servo controlled oxygen	
O_2 central supply system hose 3M NIST EN-F	86 02 514
O_2 central supply system hose 5M NIST EN-F	86 02 515
CS hose O_2 3M, DIN-ST	M 34 402
CS hose O_2 5M, DIN-ST	M 34 403
CS hose O_2 5M without connector	M 34 416
Oxygen hose 5M NIST, SW, w/o connect.	M 32 037
Adapter O_2 DIN/NIST	M 32 366
Oxygen CS hose 3M DIN BL	M 29 231
Oxygen CS hose 5M DIN BL	M 29 251
MiniOx 3000	2M 22 464

Designation and description	Part No.
Shelves, holders, infusion accessories	
Shelf, monitor	2M 50 085
Swivel table	2M 21 186
Pole 38/600	2M 50 691
Pole 38/310	2M 50 688
Pole 25/600	2M 50 689
Basic pole	2M 50 680
Infusion support, 38 mm pole	2M 21 514
Rail-mounted infusion holder	2M 20 719
Compact rail	2M 85 337
Tray 3020	M 24 678
Notebook Holder	2M 22 171
Accessories for bed area	
Ventilation Hose holder	84 11 075
Caleo® SoftBed™	MX 17 012
Fixation Set Caleo® (France only)	2M 50 080
Accessories for secretion aspiration	
Bronchial aspiration, -0.5 bar	2M 85 125
O_2 – Air connection hose, 3M (black)	M 29 245
O_2 – Air connection hose, 5M (black)	M 29 265
Air/O_2 CS hose, 3M DIN	M 29 243
Air/O_2 CS hose, 5M DIN	M 29 263
Wire basket 510	M 24 670
Wire basket 300	M 26 145
Wire basket 600	M 25 121
Holder for litter bags	M 24 695
Set of 100 litter bags	M 26 240
Accessories for phototherapy	
Phototherapy 4000 (220-240 V)	2M 21 000
Phototherapy 4000 (110-127 V)	2M 21 700
Phototherapy 4000 (100 V)	2M 22 090
Stand for phototherapy unit 4000	2M 21 190

Designation and description	Part No.
Spare parts and wearing parts	
Water container set, complete	2M 50 040
Cap for the water container	2M 50 042
Nozzle for the water container	2M 50 039
Transfer set	MX 17 018
Water connection pipe	2M 50 237
O-ring, for water connection pipe	2M 50 346
Caleo® Fresh air filter (20 pcs)	MX 17 015
ThermoTrace™, core (set of 5), yellow	MX 11 000
ThermoTrace™, peripheral (set of 5), white	MX 11 001
ThermoPad™ (set of 50)	MX 11 002
Oxy-Trace™ Incu.	MX 01 050
Tubing grommets, large	2M 50 385
Tubing port	2M 50 412
Feeding grommet, hood	2M 50 352
Caleo® SoftBed™	MX 17 012
Vacuum mattress	2M 17 909
Lithium batteries, 3V/1400 mAh	18 35 343
Mattress cover (blue-nose kitten)	2M 21 272
Caleo hygiene poster	90 49 012
Upgrade kits	
Servo controlled humidity	2M 50 735
Servo controlled oxygen	2M 50 740
Bed scale, integrated	2M 50 745
Double wall	2M 50 421
Drawer	2M 50 565
Interface, RS 232	2M 50 750
Technical Documents	on request

Parts List

As an alternative to the part numbers listed in the Order List, the following parts and devices, which are no longer supplied by Dräger, may be used.

Designation and description	Part No.
Babyguard	57 70 025
PT 8000	2M 20 520
PT 800	2M 18 800
Bronchial aspiration	2M 85 041
Hose holder	2M 19 630
Stand for phototherapy	2M 18 780
O_2 distributor with cylinder connection	2M 18 828
Oxydig, O_2 measuring and warning device, inc. sensor capsule	83 04 411
Adhesive pads	2M 21 735

Index

Accessibility 112
Accessories 4
Activate the self-test 29
Air temperature control
  Adjusting the set value 38
  Alarms 41
  Description 115
  Using 38
Airflow routing, Description 115
Alarm descriptions 123
Alarm limits 75
Alarm muting 77
Alarm suppression 77
AUTO humidity, Description 121

Basic pole 15
Bed
  Removing 20
  Setting to the horizontal position 23
  Tilting 23
Before each use 26
Before reusing for a patient 92
Before using for the first time 12, 26
Bronchial aspiration system 14

Cancel, stop setting procedure 124, 125
Canopy 19, 27
Care 84
Care intervals 94
Care list 94
Cause 98, 103
Central alarm indicator 124
Changing over between air/skin temperature control 43
Check audible warning tone 29
Check fresh air filter 31
Check power failure alarm 30
Check the fresh air filter 86
Checking readiness for operation
  Audible warning tone 29
  Bed 28
  Bed tilting mechanism 30
  Canopy 27
  Double wall 28
  Fresh air filter 31
  Front flap 27
  Height adjustment mechanism 30
  Power failure alarm 30
  Self-test 29
  Side flap 27
  Trough 28
Classification 110
Cleaning 84, 94
Cleaning Mode 69
  Description 122
Closed-loop humidity control
  Description 121
Compact rail 14
Configuration 71
  Alarms 74
  Language/date/time 72
  O2 sensor information 76
  Software information 76
  System parameters 73
Control unit 9, 13

Description
  Accessibility 112
  Air temperature control 115
  Airflow routing 115
  Alarm 123
  Auto humidity 121
  Bed and mattress 113
  Central alarm indicator 124
  Cleaning Mode 122
  Closed-loop humidity control 121
  Kangaroo mode 118
  Manual humidity control 121
  O2 enrichment 120
  Operating principle 112
  Safety systems 122
  Skin temperature control 117
  Skin temperature measurement 116
  Twins in the Caleo® 113
  Weighing scale 114
  X-rays 113
Dimensions 109
Disinfecting 84, 94
Disinfecting/Cleaning/Sterilising 84
Disposal 96
Doors, ports and bed 18
  Bed 20, 23
  Canopy 19
  Double wall 20
  Drawer 21
  Front flap 18
  Hand ports 18
  Height adjustment 22
  Humidifier systems 24
  Integrated socket strip 25
  Sealed through-holes 21
  Side flap 19
  X-ray drawer 21
Double wall 20, 28
Drawer 17, 21

Electrical safety 36
Environmental conditions 106
Equipotential bonding 117

Fire hazard from supply of O2 34
Fitting accessories 12
Front flap 18, 27
Front view 8, 126

Hand ports 18
Height adjustment 22
Hose holder for ventilation hoses 16
Hot air duct 9, 34
Humidifier systems 24
Humidity control
  Alarms 53
  Manually adjusting the set value 51
  Setting AUTO humidity 51
  using 50
  Water shortage 53

Infusion support 13
Intended Use 5
Interfaces 108

Kangaroo mode 58
  Activating 59
  Alarms 60
  Configuration 74
  Description 118
  Ending 61
  Tubing grommets 59, 61

Labelling 125
Liability 4
Loads, max. 109
Lock key pad functions 77

Maintenance 4
Maintenance intervals 95
Manual humidity control, Description 121
Materials 85
Measurement and control parameters 107
Menus
  Cleaning Mode 69
  Kangaroo mode 58
  Selecting 58
  Trend display 62
Monitor shelf 16
Mounting the accessory equipment 12
Multiple-plug adapters 26

Notebook holder 16

O2 control
  Adjusting the set value 55
  Alarms 57
  Using 54
O2 enrichment with O2 control 17
O2 enrichment, Description 120
O2 monitor 17
O2 sensor information 76
Operating data 106
Operating principle 112
Operation
  Ending 81
  Precautions 34
  Switching on 37
Order list 128

Parts List 131
Performance characteristics 107
Phototherapy, Precautions 35
Pole extensions 15
Possibilities for nursing and therapy 5
Precautions 34
Preparation 12

Remedy 98, 103
Removing the water supply 87
Reusable components 94
Risk of burns 70, 84
Rotary knob 10

Safety 4
Safety systems, Description 122
Screen 10
Sealed through-holes 21
Setting alarms
  Alarm limits 75
  Initial volume of the alarms 75
  Kangaroo mode 74
Side flap 19, 27
Side view, connections 8, 125
Skin temperature control 42
  Adjusting the set value 45
  Alarms 48
  Description 117
  Using 45
Socket Strip 25
Socket strip 25
Software information 76
Sound intensity 75
Spirit levels 9
Sterilising 84, 94

Switch off 81
Switching on 37
Switching over between standard/trend screen 62
Swivel space 12, 14
Swivel table 14
Symbols 124
Symbols used 124

Technical Data 106
ThermoMonitoring™ 116
Tilting the bed 23, 30
Transport, In-house 35
Tray 3020 15
Trend analysis 65
    Ending 68
    Selecting the time interval (zoom) 68
    Trend selection 67
Trend display
    Selecting 62
    Setting the time interval (Zoom) 63
Troubleshooting - Error Messages 98
Troubleshooting - Faults 103
Trough 28
Twins in the Caleo®, Description 113

Used in 5

Vacuum mattress 17

Water bag 24
Water connection pipe 87
Water container 24
Water heater boiled empty 69
Water shortage 53
Weighing
    starting 78
    without tare 80
Weighing scale 78
    Description 114
What's what 8
    Control unit 9
    Front view 8, 126
    Labelling 125
    Side view, connections 8, 125
    Top view, bed 9

X-ray drawer 21
X-rays, Description 113

These Instructions for Use apply only to
Caleo®
with Serial No.:
If no Serial No. has been filled in by Dräger these Instructions for Use are provided for general information only and are not intended for use with any specific machine or device

CE 0123

Directive 93/42/EEC
concerning Medical Devices

Dräger Medical AG & Co. KGaA
Germany
Moislinger Allee 53 – 55
D- 23542 Lübeck
+49 451 8 82 - 0
26 80 70
FAX +49 451 8 82-20 80
http://www.draeger.com

90 37 571 - GA 6150.001 en
© Dräger Medical AG & Co. KGaA
2. edition - June 2002
Subject to alteration